STATE	PROJECT	SHEET NUMBER
CA	CA FLAP 03S11(1)	T21

Amendment A001
11/10/2022
Added Sheet T21

REGISTERED PROFESSIONAL ENGINEER TRANIS JAMES HOWARD C74036 CIVIL STATE OF CALIFORNIA
11/09/2022

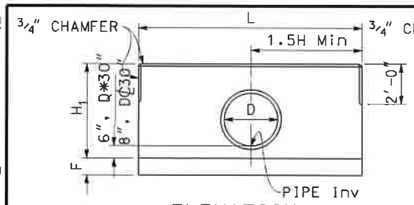

ELEVATION
STRAIGHT HEADWALL
SINGLE CIRCULAR PIPE

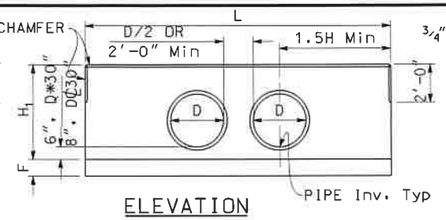

ELEVATION
STRAIGHT HEADWALL
DOUBLE CIRCULAR PIPE

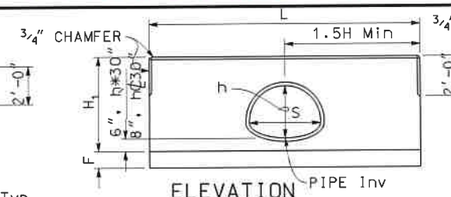

ELEVATION
STRAIGHT HEADWALL
SINGLE CMP

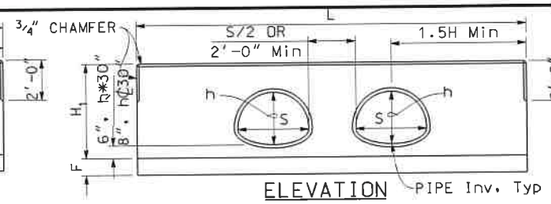

ELEVATION
STRAIGHT HEADWALL
DOUBLE CMP

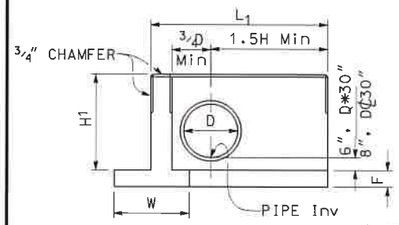

ELEVATION
"L" HEADWALL

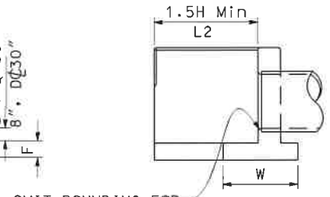

OMIT ROUNDING FOR PIPES * 48" Dia

SECTION
"L" HEADWALL

CIRCULAR PIPE CULVERT HEADWALLS

H	CIRCULAR PIPE SIZE D	CMP ARCH SIZE S x h
2'-8"	12''	–
2'-11"	15''	21" x 15"
3'-2"	18''	24" x 18"
3'-5"	21''	28" x 20"
3'-8"	24''	35" x 24"
3'-11"	27''	–
4'-2"	30''	42" x 29"
4'-8"	33''	49" x 33"
4'-11"	36''	–
5'-2"	39''	57" x 38"
5'-5"	42''	64" x 43"
5'-8"	45''	–
5'-11"	48''	71" x 47"
6'-2"	51''	–
6'-5"	54''	–

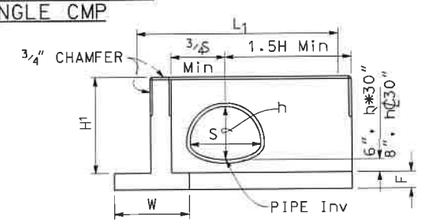

ELEVATION
"L" HEADWALL

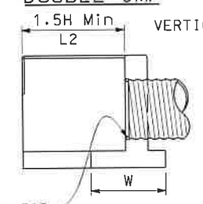

OMIT ROUNDING FOR PIPES * 48" Dia

SECTION
"L" HEADWALL

CMP ARCH CULVERT HEADWALLS

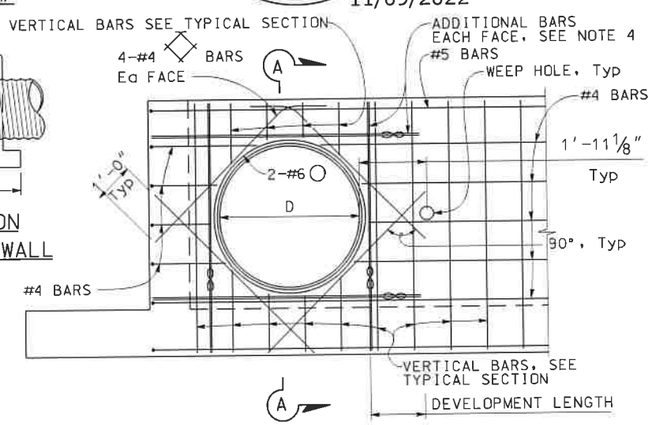

REINFORCEMENT MODIFICATION

"L" headwall shown. Straight headwall similar.
Circular pipe shown. CMP arch similar.
∞ - Bundle of two bars

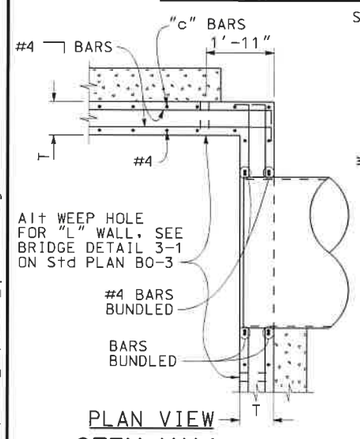

PLAN VIEW
STEM WALL

"L" headwall shown.
Straight headwall similar.

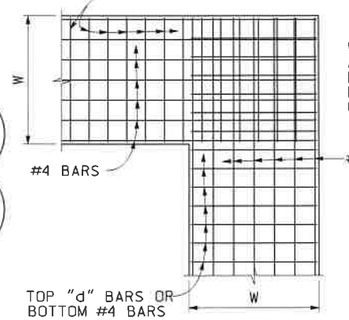

PLAN VIEW
FOOTING

"L" headwall shown.
Straight headwall similar.

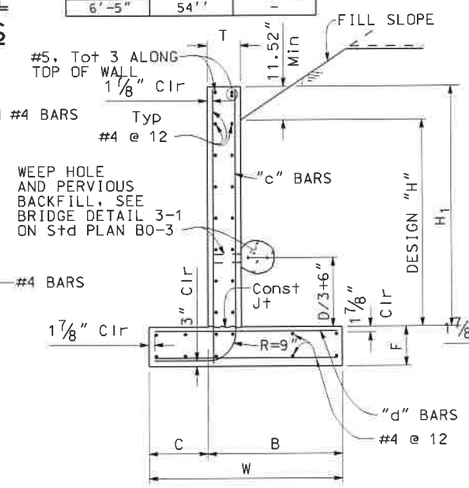

TYPICAL SECTION

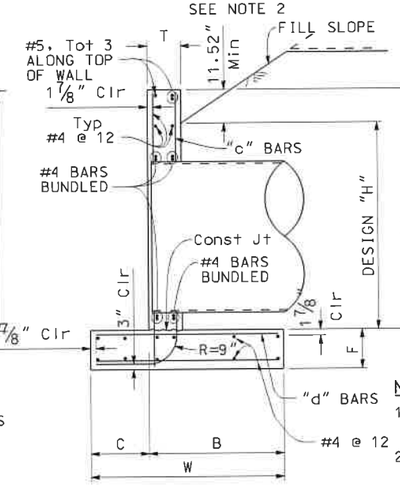

SECTION A-A

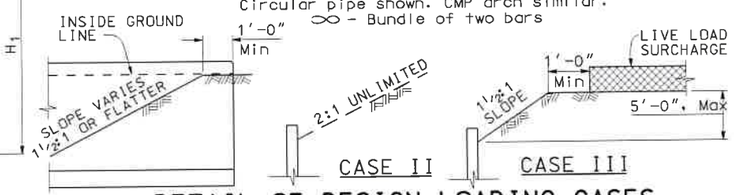

DETAIL OF DESIGN LOADING CASES

H	2'-8"	2'-11"	3'-2"	3'-5"	3'-8"	3'-11"	4'-2"	4'-8"	4'-11"	5'-2"	5'-5"	5'-8"	5'-11"	6'-2"	6'-5"
T	10"	10"	10"	10"	10"	10"	10"	10"	10"	10"	10"	10"	1-0"	1-0"	1-0"
W	2'-3"	2'-3"	2'-3"	2'-6"	2'-6"	2'-6"	3'-0"	3'-0"	3'-3"	3'-9"	4'-0"	4'-2"	4'-2"	4'-6"	4'-9"
C	6"	6"	6"	6"	6"	6"	9"	9"	9"	1'-0"	1'-0"	1'-0"	1'-0"	1'-0"	1'-3"
B	1'-9"	1'-9"	1'-9"	2'-0"	2'-0"	2'-0"	2'-3"	2'-3"	2'-3"	2'-9"	3'-0"	3'-2"	3'-2"	3'-6"	3'-6"
F	1'-0"	1'-0"	1'-0"	1'-0"	1'-0"	1'-2"	1'-2"	1'-2"	1'-2"	1'-2"	1'-2"	1'-2"	1'-2"	1'-2"	1'-2"
"c" BARS	#4 @ 12	#4 @ 12	#4 @ 12	#4 @ 12	#4 @ 12	#4 @ 12	#4 @ 12	#5 @ 12	#5 @ 12	#5 @ 12	#5 @ 12	#5 @ 12	#5 @ 9	#5 @ 9	#5 @ 9
"d" BARS	#4 @ 12	#4 @ 12	#4 @ 12	#4 @ 12	#5 @ 12	#5 @ 12	#5 @ 12	#5 @ 9	#5 @ 9	#5 @ 9	#5 @ 9	#6 @ 12	#6 @ 9	#6 @ 9	#6 @ 9
* Conc CY/LF	0.20	0.20	0.21	0.23	0.24	0.26	0.29	0.30	0.32	0.35	0.37	0.39	0.44	0.46	0.48
* Reinf LB/LF	19	20	21	22	24	24	27	32	33	36	38	39	43	47	49
**CASE II Ser (q'o, B')	0.41, 1.85	0.48, 1.89	0.55, 1.91	0.60, 1.95	0.62, 2.08	0.62, 2.20	0.63, 2.44	0.67, 2.61	0.71, 2.72	0.75, 2.87	0.80, 2.93	0.84, 3.10	0.88, 3.20	0.91, 3.44	0.95, 3.78
**CASE II Str (q'o, B')	1.07, 1.80	1.12, 1.83	1.20, 1.85	1.32, 1.89	1.34, 2.05	1.36, 2.19	1.39, 2.36	1.45, 2.48	1.50, 2.64	1.55, 2.77	1.62, 2.91	1.69, 3.16	1.72, 3.23	1.79, 3.33	1.82, 3.67
**CASE III Ser (q'o, B')	0.56, 2.05	0.62, 2.08	0.70, 2.10	0.75, 2.12	0.81, 2.20	0.83, 2.38	0.85, 2.49	0.91, 2.60	0.94, 2.75	0.97, 2.81	1.02, 2.91	1.09, 3.05	1.12, 3.12	1.18, 3.23	1.22, 3.50
**CASE III Str (q'o, B')	0.91, 2.01	0.98, 2.05	1.06, 2.04	1.19, 2.06	1.22, 2.28	1.30, 2.34	1.36, 2.40	1.41, 2.51	1.49, 2.59	1.55, 2.68	1.65, 2.76	1.71, 2.90	1.79, 3.03	1.85, 3.07	1.90, 3.33

* Quantities include 1'-0" extension above the design "H" limit.
** q'o = net bearing stress (ksf), B' = effective footing width (ft)
Ser - service limit
Str - strength limit

REINFORCED CONCRETE HEADWALL

Quantities do not include added diagonals and do not consider pipe occupancy.

NOTE: Reinforced Concrete: fy= 60,000 psi
f'c = 3,600 psi
Earth Density: 120 pcf
Equivalent Fluid Pressure: 36 pcf

NOTES:

1. Length of wall from * pipe to end of wall is 1.5H Min. The ends of headwall need to be embedded into the slope by one foot.
2. Single circular pipe or single CMP shown for "L" headwall. For double pipe in "L" headwall, see "ELEVATION STRAIGHT HEADWALL DOUBLE CIRCULAR PIPE" or "ELEVATION STRAIGHT HEADWALL DOUBLE CMP" detail for additional information.
3. Adjacent to each side of the opening, place additional reinforcement equivalent to half the interrupted main reinforcement.
4. Quantities are approximate and for design purposes only. No deduction is made for pipe or arch occupancy.
5. Provide necessary erosion protection in front of wall.
6. If precast construction is used, the design standard shall be equal to or exceed that shown here, and the bottom of footing must be roughened.
7. Pipe culvert headwalls are paid for as an each item under 60103-0660, concrete, headwall for double 36-inch pipe.

ADAPTED FROM CALTRANS STANDARD PLAN D89B
NO SCALE

U.S. DEPARTMENT OF TRANSPORTATION
FEDERAL HIGHWAY ADMINISTRATION
CENTRAL FEDERAL LANDS HIGHWAY DIVISION

U.S. CUSTOMARY SPECIAL

PIPE CULVERT HEADWALLS

SPECIAL
601-A

2018 REVISED STANDARD PLAN BSP D89B

User: USLAS0-APP3645$
11:28:43 AM \\USLAS0-APP385\ICS_workdir\71719\484815_40\T601-01_sp604-CBRM.dgn
11/9/2022

STATE	PROJECT	SHEET NUMBER
CA	CA FLAP 03S11(1)	V1

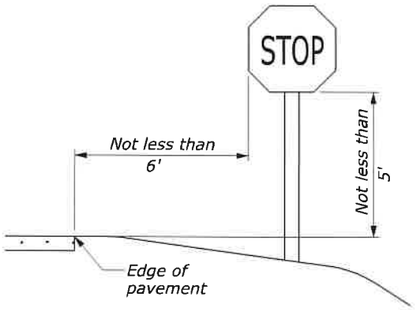

ROADSIDE SIGN RURAL DISTRICT NO SHOULDER

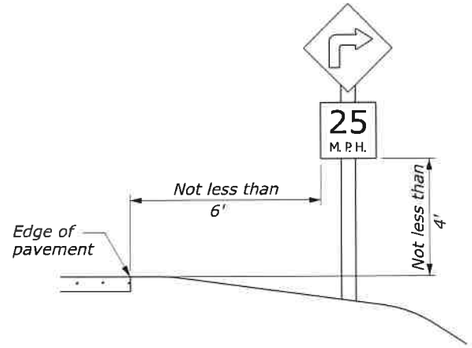

WARNING SIGN WITH ADVISORY SPEED PLAQUE RURAL DISTRICT

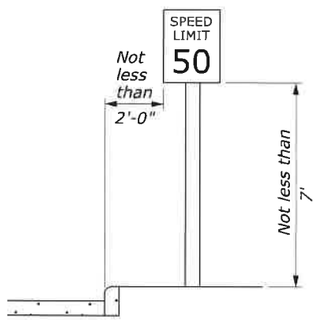

ROADSIDE SIGN BUSINESS OR RESIDENTIAL DISTRICT

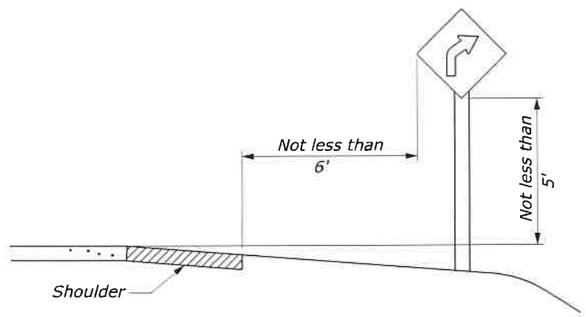

ROADSIDE SIGN RURAL DISTRICT WITH SHOULDER

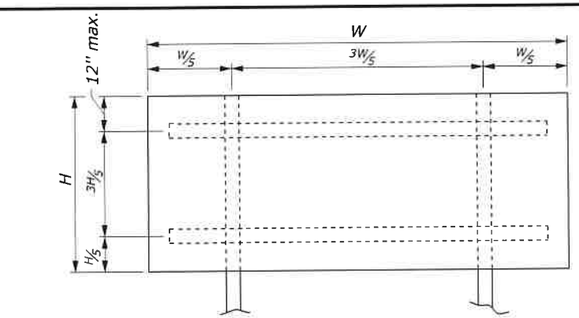

DOUBLE POST

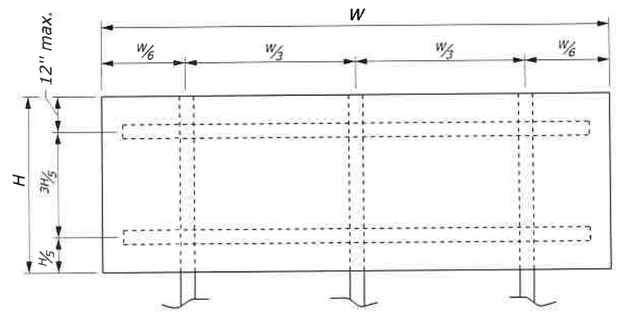

TRIPLE POST

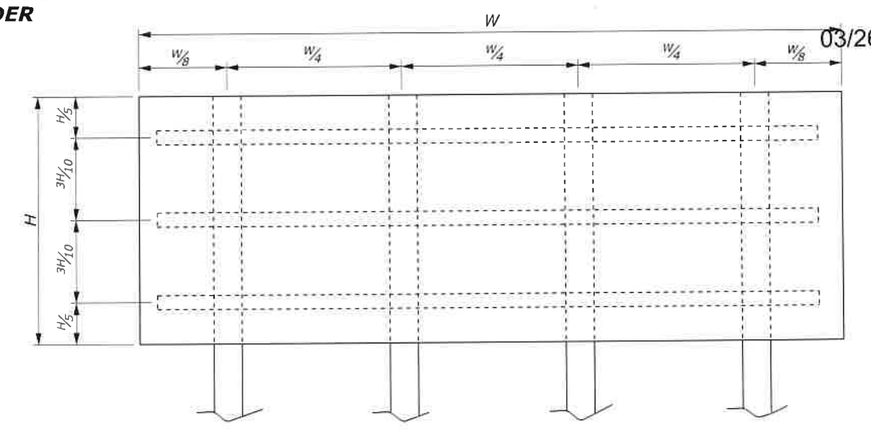

QUADRUPLE POST

NOTES:

1. Locate and set sign height according to the 'Manual on Uniform Traffic Control Devices for Streets and Highways' (MUTCD), latest edition.
2. Use wood battens bolted to post at vertical spacings not to exceed 30-inches.
3. Use double posts if W is over 3 feet or the sign is larger than 10 square feet.
4. For sign punching details, see the blank standards in the "Standard Highway Signs" as specified in the MUTCD, latest edition.
5. For signs requiring posts sizes 6 inch x 6 inch and greater, signs are considered to be non-breakaway if multiple posts are required and posts cannot be spaced a minimum of 7 feet apart. Place non-breakaway signs outside the clearzone or shield with approved barrier. Do not place holes in posts of non-breakaway signs.
6. Provide Depth, D, according to the 'Manual on Uniform Traffic Control Devices for Streets and Highways' (MUTCD), latest edition, Section 2A.21 and the AASHTO manual 'Specifications for Structural Supports for Highway Signs, Luminaires, and Traffic Signals', latest edition or as directed by the CO. D(min.) is given in CHART A.

REGISTERED PROFESSIONAL ENGINEER
TRAVIS JAMES HOWARD
C74036
CIVIL
STATE OF CALIFORNIA

03/26/2021
FOR SELECTION ONLY

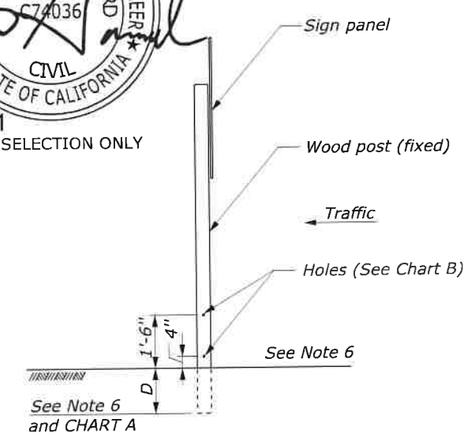

BREAKAWAY SUPPORT DETAIL

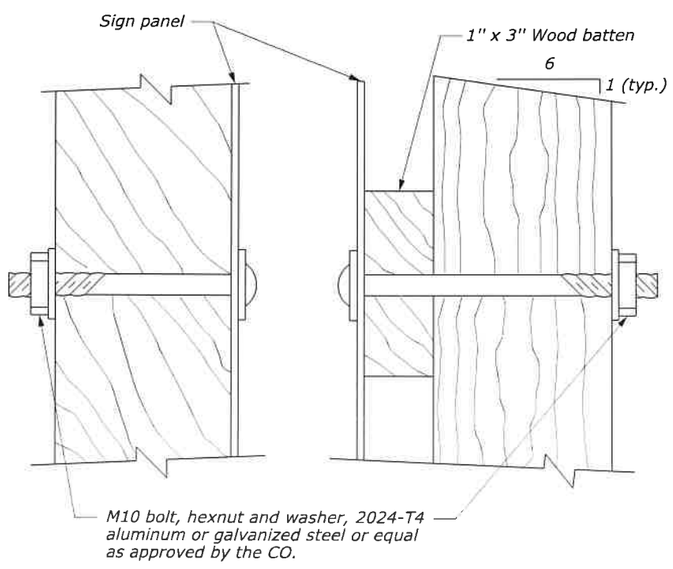

WITHOUT BATTEN **WITH BATTEN**

FASTENER DETAIL

CHART A

Post Size (Inch)	D (min.) *	Maximum Sign Area (sq. ft.)			
		Single Post	Double Post	Triple Post	Quadruple Post
4 x 4 (Wood)	3'	10	20		
4 x 6 (Wood)	4'	15	35	45	60
6 x 6 (Wood)	4'	20	50	75	100

* See note 6

CHART B

Post Size	Hole Diameter
4" x 4"	None Required
4" x 6"	1.5"
6" x 6"	2"
6" x 8"	3"

NO SCALE

U.S. DEPARTMENT OF TRANSPORTATION
FEDERAL HIGHWAY ADMINISTRATION
CENTRAL FEDERAL LANDS HIGHWAY DIVISION

U.S. CUSTOMARY DETAIL

SIGN STRUCTURES

DETAIL APPROVED FOR USE

APPROVED : MAY 2011
REVISED: MARCH 2015

DETAIL
E633-01

User: DENPWP01$.
3:02:43 PM \\denpwp01\d$\pwicsworking\845978\1346613_4\V633-02_st633-01RM.dgn
3/25/2021

STATE	PROJECT	SHEET NUMBER
CA	CA FLAP 03S11(1)	V2

SIGN DETAIL
1:20

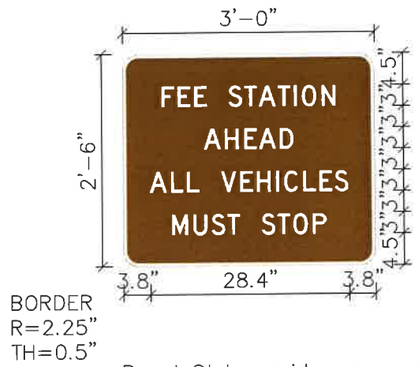

Panel Style: guide_con_recreational.ssi
M.U.T.C.D.: 2009 Edition

SIGN NUMBER	Special 1	
WIDTH x HGHT.	3'-0" x 2'-6"	
BORDER WIDTH	0.5"	
CORNER RADIUS	2.25"	
MOUNTING	Ground	
BACKGROUND	TYPE:	Reflective
	COLOR:	Brown
LEGEND/BORDER	TYPE:	Reflective
	COLOR:	White/White

SYMBOL	ROT	X	Y	WID	HT

Panel Style: guide_con_recreational.ssi
Dimensions are in inches.tenths

Letter locations are panel edge to lower left corner

LETTER POSITIONS (X)

| | | | | |

STATE	PROJECT	SHEET NUMBER
CA	CA FLAP 03S11(1)	V3

SIGN DETAIL
1:20

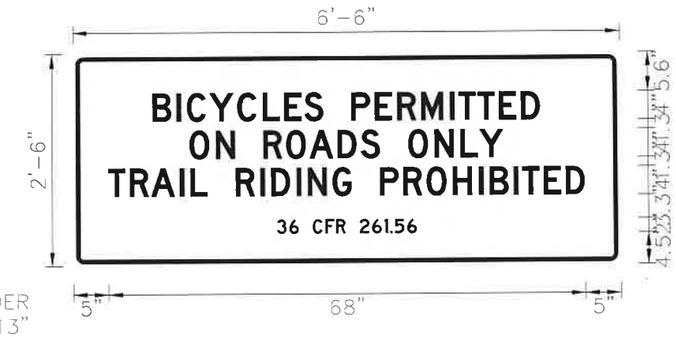

BORDER
R=1.13"
TH=0.63"
IN=0.38"

Panel Style: regulatory.ssi
M.U.T.C.D.: 2009 Edition

SIGN NUMBER	Special 2	
WIDTH x HGHT.	6'-6" x 2'-6"	
BORDER WIDTH	0.63"	
CORNER RADIUS	1.13"	
MOUNTING	Ground	
BACKGROUND	TYPE:	Reflective
	COLOR:	White
LEGEND/BORDER	TYPE:	Reflective
	COLOR:	Black/Black

SYMBOL	ROT	X	Y	WID	HT

Panel Style: regulatory.ssi
Dimensions are in inches.tenths

Letter locations are panel edge to lower left corner

LETTER POSITIONS (X)

| | | | | |

STATE	PROJECT	SHEET NUMBER
CA	CA FLAP 03S11(1)	V4

SIGN DETAIL
1:20

Panel Style: guide_fwy_recreational.ssi
M.U.T.C.D.: 2009 Edition

SIGN NUMBER	Special 3	
WIDTH x HGHT.	4'-0" x 2'-0"	
BORDER WIDTH	0.5"	
CORNER RADIUS	3"	
MOUNTING	Ground	
BACKGROUND	TYPE:	Reflective
	COLOR:	Brown
LEGEND/BORDER	TYPE:	Reflective
	COLOR:	White/White

SYMBOL	ROT	X	Y	WID	HT

Panel Style: guide_fwy_recreational.ssi
Dimensions are in inches.tenths

Letter locations are panel edge to lower left corner

LETTER POSITIONS (X)

																	LENGTH	SERIES/SIZE
C	A	M	P	I	N	G		A	N	D		F	I	R	E	S		B 2000
4	6.2	8.9	11.7	14	15.4	17.9	19.6	23.5	26.3	28.8	30.6	34.5	36.6	38	40.4	42.3	40	4
P	E	R	M	I	T	T	E	D		I	N		O	P	E	N		B 2000
4.8	7.1	9.3	11.6	14.5	15.6	17.3	19.4	21.6	23.3	27.3	28.7	30.4	34.4	37	39.3	41.4	38.3	4
C	A	M	P	G	R	O	U	N	D	S		O	N	L	Y			B 2000
4.3	6.4	9.1	12	14.1	16.6	18.9	21.5	24.1	26.7	28.9	30.6	34.6	37.2	39.8	41.6		39.5	4

REGISTERED PROFESSIONAL ENGINEER
TRAVIS JAMES HOWARD
C74036
CIVIL
STATE OF CALIFORNIA
03/26/2021

U.S. DEPARTMENT OF TRANSPORTATION
FEDERAL HIGHWAY ADMINISTRATION
CENTRAL FEDERAL LANDS HIGHWAY DIVISION

U.S. CUSTOMARY SPECIAL

SPECIAL SIGN

Sheet 3 of 27

SPECIAL
633-C

User: DENPWP02$
3:03:13 PM \\denpwp01\d$\pwicsworking\8459781\1346613_35\V633-04_sp633-CRM.dgn
3/25/2021

STATE	PROJECT	SHEET NUMBER
CA	CA FLAP 03S11(1)	V5

SIGN DETAIL
1:20

SIGN NUMBER	Special 4	
WIDTH x HGHT.	5'-0" x 2'-4"	
BORDER WIDTH	0.63"	
CORNER RADIUS	1.13"	
MOUNTING	Ground	
BACKGROUND	TYPE:	Reflective
	COLOR:	White
LEGEND/BORDER	TYPE:	Reflective
	COLOR:	Black/Black

SYMBOL	ROT	X	Y	WID	HT

Panel Style: regulatory.ssi
Dimensions are in inches.tenths

Letter locations are panel edge to lower left corner

LETTER POSITIONS (X)

																																						LENGTH	SERIES/SIZE
B	E	A	R		H	A	B	I	T	A	T																													C 2000
14.1	17	19.4	22.6	24.8	28.8	31.6	34.7	37.6	38.8	41	43.8																											31.8	4
P	R	O	P	E	R		F	O	O	D		S	T	O	R	A	G	E																						C 2000
2.5	5.5	8.4	11.5	14.6	17.3	19.5	23.5	26	29.1	32.3	34.5	38.5	41.1	43.6	46.8	49.4	52.4	55.5																				55	4
R	E	Q	U	I	R	E	D		B	Y		L	A	W																										C 2000
8.8	11.7	14.3	17.5	20.6	22.1	25	27.7	29.9	33.9	36.5	39.1	43.1	45.4	48.2																								42.4	4
3	6		C	F	R		2	6	1	.	5	8	(	c	c	)																							D 2000
14.7	16.9	18.6	21.1	23.3	25.3	27	29.5	31.7	33.9	34.9	35.7	37.9	40.1	41.2	42.9	44.5																						30.7	2.5/1.9

REGISTERED PROFESSIONAL ENGINEER
TRAVIS JAMES HOWARD
C74036
CIVIL
STATE OF CALIFORNIA
03/26/2021

U.S. DEPARTMENT OF TRANSPORTATION
FEDERAL HIGHWAY ADMINISTRATION
CENTRAL FEDERAL LANDS HIGHWAY DIVISION

U.S. CUSTOMARY SPECIAL

SPECIAL SIGN

Sheet 4 of 27

SPECIAL
633-D

User: DENPWP01$
3:03:14 PM \\denpwp01\d$\pwicsworking\8459781\1346613_23\V633-04_sp633-DRM.dgn
3/25/2021

STATE	PROJECT	SHEET NUMBER
CA	CA FLAP 03S11(1)	V6

SIGN DETAIL
1:20

Panel Style: guide_fwy_recreational.ssi
M.U.T.C.D.: 2009 Edition

SIGN NUMBER	Special 5	
WIDTH x HGHT.	9'-4" x 2'-10"	
BORDER WIDTH	1"	
CORNER RADIUS	5"	
MOUNTING	Ground	
BACKGROUND	TYPE:	Reflective
	COLOR:	Brown
LEGEND/BORDER	TYPE:	Reflective
	COLOR:	White/White

SYMBOL	ROT	X	Y	WID	HT
AR_Type B	270	101.2	14	6	6.8

Panel Style: guide_fwy_recreational.ssi
Dimensions are in inches.tenths

Letter locations are panel edge to lower left corner

LETTER POSITIONS (X)

																																							LENGTH	SERIES/SIZE
A	g	n	e	w		M	e	a	d	o	w	s																												D 2000
18.6	24.2	29	33.5	37.4	44.1	50.1	55.9	60	64.3	68.9	73	80.1																											64.4	6/4.5
T	r	a	i	l	h	e	a	d	s	,		C	a	m	p	g	r	o	u	n	d	s																		D 2000
4	8.5	11.2	15.8	17.9	20.1	24.5	28.6	32.9	37.4	40.6	41.7	47.7	52.7	57.2	64.3	68.6	73.4	76.2	80.7	85.5	89.9	94.4																	93.2	6/4.5
&		P	a	c	k		S	t	a	t	i	o	n																											D 2000
21.4	26.7	32.7	37.3	41.6	45.9	49.8	55.8	60.2	63	67	70.1	72	76.6																										58.7	6/4.5

REGISTERED PROFESSIONAL ENGINEER
TRAVIS JAMES HOWARD
C74036
CIVIL
STATE OF CALIFORNIA
03/26/2021

U.S. DEPARTMENT OF TRANSPORTATION
FEDERAL HIGHWAY ADMINISTRATION
CENTRAL FEDERAL LANDS HIGHWAY DIVISION

U.S. CUSTOMARY SPECIAL

SPECIAL SIGN

Sheet 5 of 27

SPECIAL
633-E

User: DENPWP02$
3/25/2021 3:02:25 PM \\denpwp01\d$\pwicsworking\8459781\1346613_24\V633-04_sp633-ERM.dgn

STATE	PROJECT	SHEET NUMBER
CA	CA FLAP 03S11(1)	V7

SIGN DETAIL
1:20

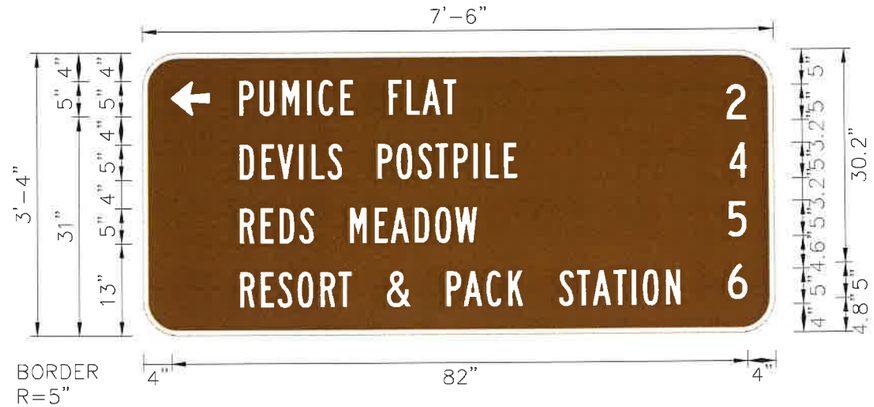

Panel Style: guide_fwy_recreational.ssi
Dimensions are in inches.tenths

Panel Style: guide_fwy_recreational.ssi
M.U.T.C.D.: 2009 Edition

SIGN NUMBER	Special 6
WIDTH x HGHT.	7'-6" x 3'-4"
BORDER WIDTH	0.75"
CORNER RADIUS	5"
MOUNTING	Overhead
BACKGROUND	TYPE: Reflective
	COLOR: Brown
LEGEND/BORDER	TYPE: Reflective
	COLOR: White/White

SYMBOL	ROT	X	Y	WID	HT
AR_Type B	90	4	31	5	5.7

Letter locations are panel edge to lower left corner

LETTER POSITIONS (X)

																																						LENGTH	SERIES/SIZE
P	U	M	I	C	E		F	L	A	T																														B 2000
13.7	16.6	19.8	23.4	25	28.1	30	35	37.6	39.8	42.8																												31	5
2																																								C 2000
83.2																																						2.8	5
D	E	V	I	L	S		P	O	S	T	P	I	L	E																										B 2000
13.7	16.8	19.1	22.2	23.9	26.2	28.4	33.4	36.1	39	41.6	44.2	47	48.8	51.4																								39.6	5
4																																								B 2000
83.6																																						2.5	5
R	E	D	S		M	E	A	D	O	W																														B 2000
13.7	16.7	19.4	22.2	24.3	29.3	32.9	35.2	38.6	41.5	44.4																												33.9	5
5																																								C 2000
83.2																																						2.8	5
R	E	S	O	R	T		&		P	A	C	K		S	T	A	T	I	O	N																				B 2000
13.7	16.7	19.1	21.9	25.1	27.7	29.6	34.6	38.1	43.1	45.5	48.8	51.9	54.1	59.1	61.6	63.8	66.8	69.4	71	74.3																				5
6																																								C 2000
83.2																																						2.8	5

REGISTERED PROFESSIONAL ENGINEER
TRAVIS JAMES HOWARD
C74036
CIVIL
STATE OF CALIFORNIA

03/26/2021

U.S. DEPARTMENT OF TRANSPORTATION
FEDERAL HIGHWAY ADMINISTRATION
CENTRAL FEDERAL LANDS HIGHWAY DIVISION

U.S. CUSTOMARY SPECIAL

SPECIAL SIGN

Sheet 6 of 27

SPECIAL
633-F

User: DENPWP023_
3:02:52 PM \\denpwp01\d$\pwicsworking\8459781\1346613_25\V633-04_sp633-FRM.dgn
3/25/2021

STATE	PROJECT	SHEET NUMBER
CA	CA FLAP 03S11(1)	V8

SIGN DETAIL
1:20

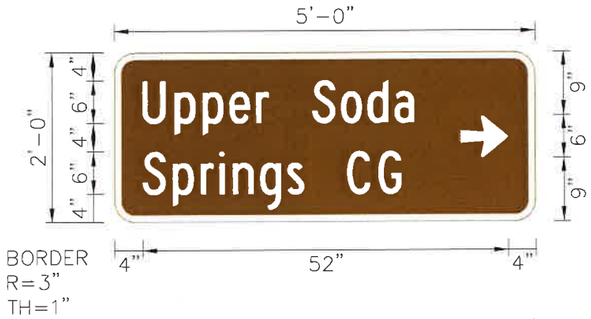

Panel Style: guide_fwy_recreational.ssi
M.U.T.C.D.: 2009 Edition

SIGN NUMBER	Special 7	
WIDTH x HGHT.	5'-0" x 2'-0"	
BORDER WIDTH	1"	
CORNER RADIUS	3"	
MOUNTING	Overhead	
BACKGROUND	TYPE:	Reflective
	COLOR:	Brown
LEGEND/BORDER	TYPE:	Reflective
	COLOR:	White/White

SYMBOL	ROT	X	Y	WID	HT
AR_Type B	270	49.2	9	6	6.8

Panel Style: guide_fwy_recreational.ssi
Dimensions are in inches.tenths

Letter locations are panel edge to lower left corner

LETTER POSITIONS (X)

										LENGTH	SERIES/SIZE
U	p	p	e	r		S	o	d	a	38.7	C 2000 6/4.5
4	8.5	12.5	16.3	20.1	22.1	28.1	32.2	35.9	39.8		
S	p	r	i	n	g	s		C	G	36.8	C 2000 6/4.5
4	8.2	12.2	14.8	16.7	20.6	24.5	27	33	37.4		

REGISTERED PROFESSIONAL ENGINEER
TRAVIS JAMES HOWARD
C74036
CIVIL
STATE OF CALIFORNIA
03/26/2021

U.S. DEPARTMENT OF TRANSPORTATION
FEDERAL HIGHWAY ADMINISTRATION
CENTRAL FEDERAL LANDS HIGHWAY DIVISION

U.S. CUSTOMARY SPECIAL

SPECIAL SIGN

Sheet 7 of 27

SPECIAL
633-G

3/25/2021 3:03:18 PM \\denpwp01\d$\pwicsworking\845978\1346613_261\633-04_sp633-GRM.dgn _User: DENPWP02$_

STATE	PROJECT	SHEET NUMBER
CA	CA FLAP 03S11(1)	V9

SIGN DETAIL
1:20

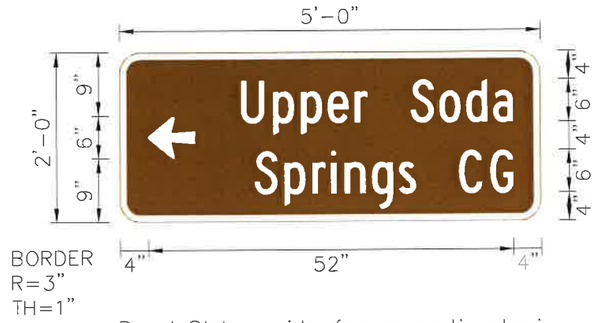

Panel Style: guide_fwy_recreational.ssi
M.U.T.C.D.: 2009 Edition

SIGN NUMBER	Special 8		
WIDTH x HGHT.	5'-0" x 2'-0"		
BORDER WIDTH	1"		
CORNER RADIUS	3"		
MOUNTING	Overhead		
BACKGROUND	TYPE:	Reflective	
	COLOR:	Brown	
LEGEND/BORDER	TYPE:	Reflective	
	COLOR:	White/White	

SYMBOL	ROT	X	Y	WID	HT
AR_Type B	90	4	9	6	6.8

Panel Style: guide_fwy_recreational.ssi
Dimensions are in inches.tenths

Letter locations are panel edge to lower left corner

LETTER POSITIONS (X)

										LENGTH	SERIES/SIZE
U	p	p	e	r		S	o	d	a		C 2000
17.3	21.9	25.9	29.6	33.5	35.5	41.5	45.5	49.3	53.2	38.7	6/4.5
S	p	r	i	n	g	s		C	G		C 2000
19.2	23.5	27.4	30.1	32	35.9	39.7	42.2	48.2	52.7	36.8	6/4.5

REGISTERED PROFESSIONAL ENGINEER
TRAVIS JAMES HOWARD
C74036
CIVIL
STATE OF CALIFORNIA
03/26/2021

U.S. DEPARTMENT OF TRANSPORTATION
FEDERAL HIGHWAY ADMINISTRATION
CENTRAL FEDERAL LANDS HIGHWAY DIVISION

U.S. CUSTOMARY SPECIAL

SPECIAL SIGN

Sheet 8 of 27

SPECIAL
633-H

User: DENPWP03$
3:02:22 PM \\denpwp01\d$\pwicsworking\845978\1346613_27\V633-04_sp633-HRM.dgn
3/25/2021

STATE	PROJECT	SHEET NUMBER
CA	CA FLAP 03S11(1)	V10

SIGN DETAIL
1:20

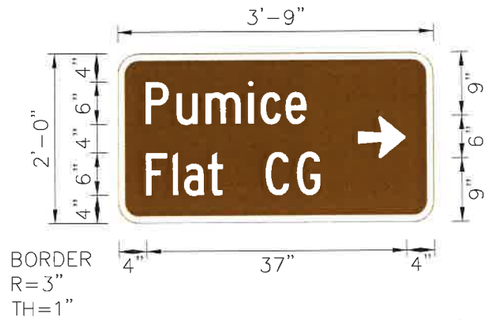

Panel Style: guide_fwy_recreational.ssi
M.U.T.C.D.: 2009 Edition

SIGN NUMBER	Special 9	
WIDTH x HGHT.	3'-9" x 2'-0"	
BORDER WIDTH	1"	
CORNER RADIUS	3"	
MOUNTING	Overhead	
BACKGROUND	TYPE:	Reflective
	COLOR:	Brown
LEGEND/BORDER	TYPE:	Reflective
	COLOR:	White/White

SYMBOL	ROT	X	Y	WID	HT
AR_Type B	270	34.2	9	6	6.8

Panel Style: guide_fwy_recreational.ssi
Dimensions are in inches.tenths

Letter locations are panel edge to lower left corner

LETTER POSITIONS (X)

							LENGTH	SERIES/SIZE
P	u	m	i	c	e			C 2000
4	8.4	12.5	18.6	20.3	23.9		22.9	6/4.5
F	l	a	t		C	G		C 2000
4	7.8	9.4	12.8	15	21	25.4	24.8	6/4.5

REGISTERED PROFESSIONAL ENGINEER
TRAVIS JAMES HOWARD
C74036
CIVIL
STATE OF CALIFORNIA
03/26/2021

U.S. DEPARTMENT OF TRANSPORTATION
FEDERAL HIGHWAY ADMINISTRATION
CENTRAL FEDERAL LANDS HIGHWAY DIVISION

U.S. CUSTOMARY SPECIAL

SPECIAL SIGN

Sheet 9 of 27

SPECIAL
633-I

User: DENPWP03$
3/25/2021 3:02:15 PM \\denpwp01\d$\pwicsworking\845978\1346613_31\V633-04_sp633-IRM.dgn

STATE	PROJECT	SHEET NUMBER
CA	CA FLAP 03S11(1)	V11

SIGN DETAIL
1:20

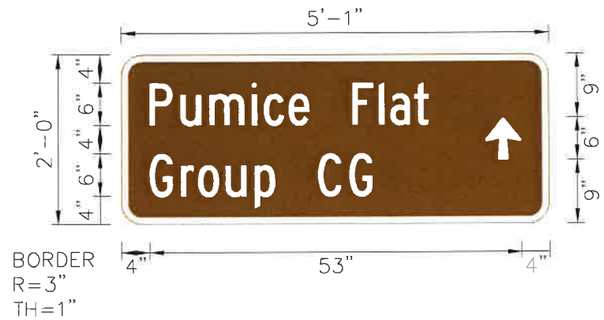

Panel Style: guide_fwy_recreational.ssi
M.U.T.C.D.: 2009 Edition

SIGN NUMBER	Special 10	
WIDTH x HGHT.	5'-1" x 2'-0"	
BORDER WIDTH	1"	
CORNER RADIUS	3"	
MOUNTING	Ground	
BACKGROUND	TYPE:	Reflective
	COLOR:	Brown
LEGEND/BORDER	TYPE:	Reflective
	COLOR:	White/White

SYMBOL	ROT	X	Y	WID	HT
AR_Type B	0	51.8	9	5.2	6

Panel Style: guide_fwy_recreational.ssi
Dimensions are in inches.tenths

Letter locations are panel edge to lower left corner

LETTER POSITIONS (X)

												LENGTH	SERIES/SIZE
P	u	m	i	c	e		F	l	a	t			C 2000
4	8.4	12.5	18.6	20.3	23.9	26.9	32.9	36.7	38.3	41.7		39.9	6/4.5
G	r	o	u	p		C	G						C 2000
4	8.4	10.9	14.8	18.9	22.	28	32.4					31.8	6/4.5

REGISTERED PROFESSIONAL ENGINEER
TRAVIS JAMES HOWARD
C74036
CIVIL
STATE OF CALIFORNIA
03/26/2021

U.S. DEPARTMENT OF TRANSPORTATION
FEDERAL HIGHWAY ADMINISTRATION
CENTRAL FEDERAL LANDS HIGHWAY DIVISION

U.S. CUSTOMARY SPECIAL

SPECIAL SIGN

Sheet 10 of 27

SPECIAL
633-J

User: DENPWP02$
3:01:53 PM \\denpwp01\d$\pwicsworking\8459781\346613_281\633-04_sp633-JRM.dgn
3/25/2021

STATE	PROJECT	SHEET NUMBER
CA	CA FLAP 03S11(1)	V12

SIGN DETAIL
1:20

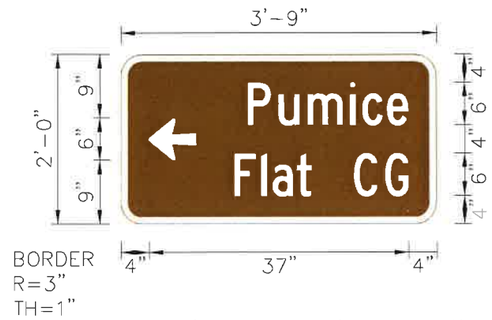

Panel Style: guide_fwy_recreational.ssi
M.U.T.C.D.: 2009 Edition

SIGN NUMBER	Special 11	
WIDTH x HGHT.	3'-9" x 2'-0"	
BORDER WIDTH	1"	
CORNER RADIUS	3"	
MOUNTING	Ground	
BACKGROUND	TYPE:	Reflective
	COLOR:	Brown
LEGEND/BORDER	TYPE:	Reflective
	COLOR:	White/White

SYMBOL	ROT	X	Y	WID	HT
AR_Type B	90	4	9	6	6.8

Panel Style: guide_fwy_recreational.ssi
Dimensions are in inches.tenths

Letter locations are panel edge to lower left corner

LETTER POSITIONS (X)

| | | |

STATE	PROJECT	SHEET NUMBER
CA	CA FLAP 03S11(1)	V13

SIGN DETAIL
1:20

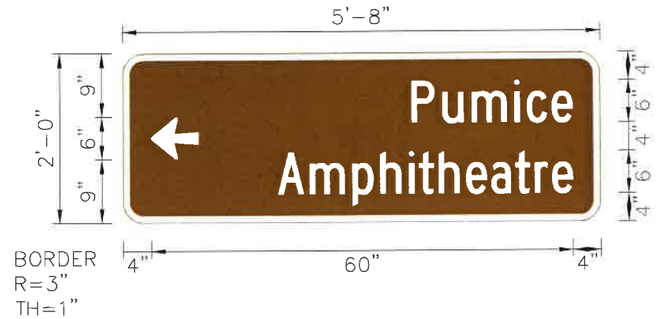

Panel Style: guide_fwy_recreational.ssi
M.U.T.C.D.: 2009 Edition

SIGN NUMBER	Special 12	
WIDTH x HGHT.	5'-8" x 2'-0"	
BORDER WIDTH	1"	
CORNER RADIUS	3"	
MOUNTING	Ground	
BACKGROUND	TYPE:	Reflective
	COLOR:	Brown
LEGEND/BORDER	TYPE:	Reflective
	COLOR:	White/White

SYMBOL	ROT	X	Y	WID	HT
AR_Type B	90	4	9	6	6.8

Panel Style: guide_fwy_recreational.ssi
Dimensions are in inches.tenths

Letter locations are panel edge to lower left corner

LETTER POSITIONS (X)

																																				LENGTH	SERIES/SIZE
P	u	m	i	c	e																																C 2000
41.1	45.5	49.6	55.7	57.4	60.9																															22.9	6/4.5
A	m	p	h	i	t	h	e	a	t	r	e																										C 2000
22	26.6	32.6	36.6	40.7	42.1	44.9	48.8	52.3	55.7	58.5	60.9																									42	6/4.5

REGISTERED PROFESSIONAL ENGINEER
TRAVIS JAMES HOWARD
C74036
CIVIL
STATE OF CALIFORNIA
03/26/2021

U.S. DEPARTMENT OF TRANSPORTATION
FEDERAL HIGHWAY ADMINISTRATION
CENTRAL FEDERAL LANDS HIGHWAY DIVISION

U.S. CUSTOMARY SPECIAL

SPECIAL SIGN

Sheet 12 of 27

SPECIAL
633-L

User: DENPWP01$
3:03:00 PM \\denpwp01\d$\pwicsworking\8459978\1346613_32\V633-04_sp633-LRM.dgn
3/25/2021

STATE	PROJECT	SHEET NUMBER
CA	CA FLAP 03S11(1)	V14

SIGN DETAIL
1:20

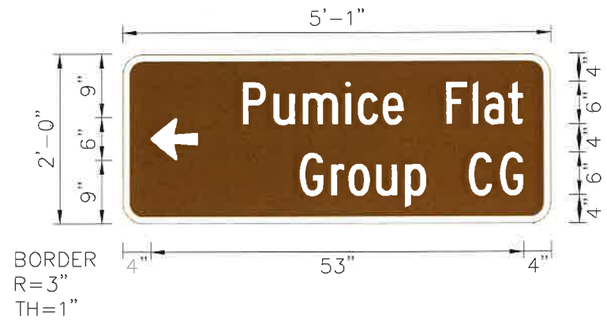

Panel Style: guide_fwy_recreational.ssi
M.U.T.C.D.: 2009 Edition

SIGN NUMBER	Special 13	
WIDTH x HGHT.	5'-1" x 2'-0"	
BORDER WIDTH	1"	
CORNER RADIUS	3"	
MOUNTING	Ground	
BACKGROUND	TYPE:	Reflective
	COLOR:	Brown
LEGEND/BORDER	TYPE:	Reflective
	COLOR:	White/White

SYMBOL	ROT	X	Y	WID	HT
AR_Type B	90	4	9	6	6.8

Panel Style: guide_fwy_recreational.ssi
Dimensions are in inches.tenths

Letter locations are panel edge to lower left corner

LETTER POSITIONS (X)

											LENGTH	SERIES/SIZE
P u m i c e		F l a t									39.9	C 2000 6/4.5
17.1 21.5 25.6 31.7 33.4 37	40	46 49.8 51.4 54.8										
G r o u p		C G									31.8	C 2000 6/4.5
25.2 29.6 32.1 36 40.1 43.2	49.2	53.6										

REGISTERED PROFESSIONAL ENGINEER
TRAVIS JAMES HOWARD
C74036
CIVIL
STATE OF CALIFORNIA
03/26/2021

U.S. DEPARTMENT OF TRANSPORTATION
FEDERAL HIGHWAY ADMINISTRATION
CENTRAL FEDERAL LANDS HIGHWAY DIVISION

U.S. CUSTOMARY SPECIAL

SPECIAL SIGN

Sheet 13 of 27

SPECIAL
633-M

User: DENPWP023$
3:03:45 PM \\denpwp01\d$\pwicsworking\8459781\346613_33\V633-04_sp633-MRM.dgn
3/25/2021

STATE	PROJECT	SHEET NUMBER
CA	CA FLAP 03S11(1)	V15

SIGN DETAIL
1:20

Panel Style: guide_fwy_recreational.ssi
M.U.T.C.D.: 2009 Edition

SIGN NUMBER	Special 14	
WIDTH x HGHT.	3'-9" x 2'-0"	
BORDER WIDTH	1"	
CORNER RADIUS	3"	
MOUNTING	Ground	
BACKGROUND	TYPE:	Reflective
	COLOR:	Brown
LEGEND/BORDER	TYPE:	Reflective
	COLOR:	White/White

SYMBOL	ROT	X	Y	WID	HT
AR_Type B	90	4	9	6	6.8

Panel Style: guide_fwy_recreational.ssi
Dimensions are in inches.tenths

Letter locations are panel edge to lower left corner

LETTER POSITIONS (X)

																																						LENGTH	SERIES/SIZE
M	i	n	a	r	e	t																																	C 2000
17.3	22.4	24.3	28.1	32	34.5	37.8																																22.7	6/4.5
F	a	l	l	s		C	G																																C 2000
12.8	16.2	20.1	22.1	23.7	26.2	32.2	36.6																															27.2	6/4.5

REGISTERED PROFESSIONAL ENGINEER
TRAVIS JAMES HOWARD
C74036
CIVIL
STATE OF CALIFORNIA
03/26/2021

U.S. DEPARTMENT OF TRANSPORTATION
FEDERAL HIGHWAY ADMINISTRATION
CENTRAL FEDERAL LANDS HIGHWAY DIVISION

U.S. CUSTOMARY SPECIAL

SPECIAL SIGN

Sheet 14 of 27

SPECIAL
633-N

User: DENPWP03$
3/25/2021 3:03:03 PM \\denpwp01\d$\pwicsworking\845978\1346613_34\633-04_sp633-NRM.dgn

User: DENPWP01$_
3:03:22 PM \\denpwp01\ds\pwicsworking\8459781\1346613_36\V633-04_sp633-ORM.dgn
3/25/2021

STATE	PROJECT	SHEET NUMBER
CA	CA FLAP 03S11(1)	V16

SIGN DETAIL
1:20

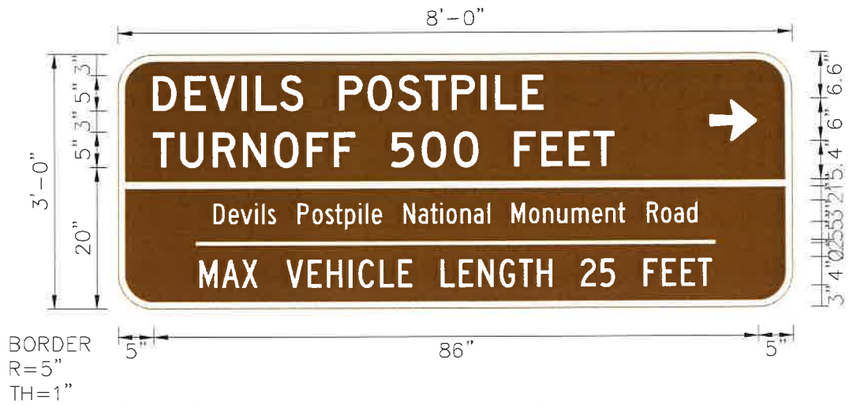

SIGN NUMBER	Special 15	
WIDTH x HGHT.	8'-0" x 3'-0"	
BORDER WIDTH	1"	
CORNER RADIUS	5"	
MOUNTING	Ground	
BACKGROUND	TYPE:	Reflective
	COLOR:	Brown
LEGEND/BORDER	TYPE:	Reflective
	COLOR:	White/White

SYMBOL	ROT	X	Y	WID	HT
AR_Type B	270	84.2	23.4	6	6.8

Panel Style: guide_fwy_recreational.ssi
Dimensions are in inches.tenths

Panel Style: guide_fwy_recreational.ssi
M.U.T.C.D.: 2009 Edition

Letter locations are panel edge to lower left corner

LETTER POSITIONS (X)

																																								LENGTH	SERIES/SIZE
D	E	V	I	L	S		P	O	S	T	P	I	L	E																											D 2000
5	9.5	13	17.6	19.6	23.1	26.5	31.5	35.5	39.8	43.6	47.5	51.6	53.6	57.5																										55.6	5
T	U	R	N	O	F	F		5	0	0		F	E	E	T																										D 2000
5	8.9	13.5	17.7	22.2	26.9	30.7	33.8	38.8	43.2	47.8	51.3	56.3	60.2	64.1	67.6																									65.7	5
D	e	v	i	l	s		P	o	s	t	p	i		e		N	a	t	i	o	n	a	l		M	o	n	u	m	e	n	t		R	o	a	d				C 2000
13.5	15.7	17.4	19.5	20.4	21.3	22.5	25.5	27.6	29.5	30.9	32.2	34.2	35.2	36	37.6	40.6	42.7	44.4	45.8	46.7	48.6	50.5	52.5	52.9	55.9	58.4	60.4	62.4	64.5	67.4	69.3	71.1	72.2	75.2	77.2	79.1	80.9				3/2.3
M	A	X		V	E	H	I	C	L	E		L	E	N	G	T	H		2	5		F	E	E	T																C 2000
11.5	14.7	17.5	19.9	23.9	26.9	29.7	32.8	34.1	37.2	39.8	41.8	45.8	48.4	51.1	54.2	56.9	59.5	61.7	65.7	68.5	70.7	74.7	77.3	80	82.4															72.9	4

REGISTERED PROFESSIONAL ENGINEER
TRAVIS JAMES HOWARD
C74036
CIVIL
STATE OF CALIFORNIA
03/26/2021

U.S. DEPARTMENT OF TRANSPORTATION
FEDERAL HIGHWAY ADMINISTRATION
CENTRAL FEDERAL LANDS HIGHWAY DIVISION

U.S. CUSTOMARY SPECIAL

SPECIAL SIGN

Sheet 15 of 27

SPECIAL
633-O

STATE	PROJECT	SHEET NUMBER
CA	CA FLAP 03S11(1)	V17

SIGN DETAIL
1:20

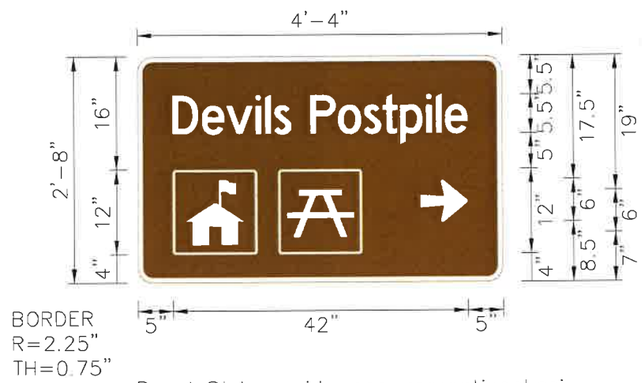

Panel Style: guide_con_recreational.ssi
M.U.T.C.D.: 2009 Edition

SIGN NUMBER	Special 6
WIDTH x HGHT.	4'-4" x 2'-8"
BORDER WIDTH	0.75"
CORNER RADIUS	2.25"
MOUNTING	Ground
BACKGROUND	TYPE: Reflective
	COLOR: Brown
LEGEND/BORDER	TYPE: Reflective
	COLOR: White/White

SYMBOL	ROT	X	Y	WID	HT
AR_Type B	270	40.2	8.5	6	6.8
RS-044	0	23	7	6	6
RS-015	0	5	4	12	12
RS-148	0	20	4	12	12

Panel Style: guide_con_recreational.ssi
Dimensions are in inches.tenths

Letter locations are panel edge to lower left corner

LETTER POSITIONS (X)

															LENGTH	SERIES/SIZE
D	e	v	i	l	s		P	o	s	t	p	i	l	e		D 2000
5	9.2	12.6	16.8	18.2	19.4	22	24.6	28.6	32.2	34.9	37.4	41.1	42.5	43.8	42	5.5/4.1

REGISTERED PROFESSIONAL ENGINEER
TRAVIS JAMES HOWARD
C74036
CIVIL
STATE OF CALIFORNIA
03/26/2021

U.S. DEPARTMENT OF TRANSPORTATION
FEDERAL HIGHWAY ADMINISTRATION
CENTRAL FEDERAL LANDS HIGHWAY DIVISION

U.S. CUSTOMARY SPECIAL

SPECIAL SIGN

Sheet 16 of 27

SPECIAL
633-P

User: DENPWP03$
3:02:45 PM \\denpwp01\d$\pwicsworking\8459781\1346613_17\V633-04_sp633-PRM.dgn
3/25/2021

STATE	PROJECT	SHEET NUMBER
CA	CA FLAP 03S11(1)	V18

SIGN DETAIL
1:20

Panel Style: guide_con_recreational.ssi
M.U.T.C.D.: 2009 Edition

SIGN NUMBER	Special 17
WIDTH x HGHT.	7'-9" x 3'-4"
BORDER WIDTH	0.75"
CORNER RADIUS	3"
MOUNTING	Ground
BACKGROUND	TYPE: Reflective
	COLOR: Brown
LEGEND/BORDER	TYPE: Reflective
	COLOR: White/White

SYMBOL	ROT	X	Y	WID	HT
AR_Type B	90	6.5	28.8	6	6.8

Panel Style: guide_con_recreational.ssi
Dimensions are in inches.tenths

Letter locations are panel edge to lower left corner

LETTER POSITIONS (X)

																																						LENGTH	SERIES/SIZE
S	O	T	C	H	E	R		L	A	K	E																												B 2000
15.8	18.9	22	24.7	28.1	31.7	34.7	37	42.5	44.9	48.7	52																											38.3	5.5
R	E	D	S		M	E	A	D	O	W		C	A	M	P	G	R	O	U	N	D																		B 2000
6.5	9.7	12.7	15.8	18.2	23.7	27.6	30.1	33.8	37.1	40.2	43.7	49.2	52.2	55.9	59.9	62.8	66.2	69.3	72.9	76.5	80																	75.9	5.5
R	E	S	O	R	T		&		P	A	C	K		S	T	A	T	I	O	N																			B 2000
6.5	9.7	12.4	15.5	19	21.8	23.9	29.4	33.3	38.8	41.5	45.1	48.5	50.9	56.4	59.2	61.6	64.9	67.8	69.5	73.1																			69	5.5

REGISTERED PROFESSIONAL ENGINEER
TRAVIS JAMES HOWARD
C74036
CIVIL
STATE OF CALIFORNIA
03/26/2021

U.S. DEPARTMENT OF TRANSPORTATION
FEDERAL HIGHWAY ADMINISTRATION
CENTRAL FEDERAL LANDS HIGHWAY DIVISION

U.S. CUSTOMARY SPECIAL

SPECIAL SIGN

Sheet 17 of 27

SPECIAL
633-Q

User: DENPWP03$
3:01:59 PM \\denpwp01\d$\pwicsworking\8459781\1346613_18\V633-04_sp633-QRM.dgn
3/25/2021

STATE	PROJECT	SHEET NUMBER
CA	CA FLAP 03S11(1)	V19

SIGN DETAIL
1:20

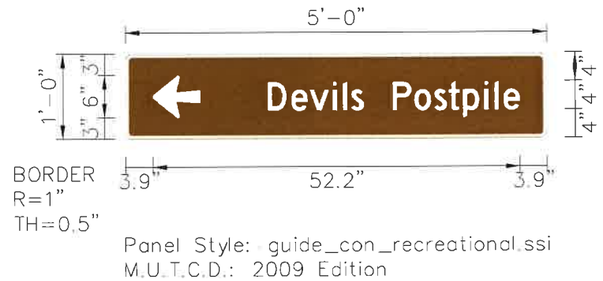

SIGN NUMBER	Special 18
WIDTH x HGHT,	5'-0" x 1'-0"
BORDER WIDTH	0.5"
CORNER RADIUS	1"
MOUNTING	Ground
BACKGROUND	TYPE: Reflective
	COLOR: Brown
LEGEND/BORDER	TYPE: Reflective
	COLOR: White/White

SYMBOL	ROT	X	Y	WID	HT
AR_Type B	90	3.9	3	6	6.8

Panel Style: guide_con_recreational.ssi
Dimensions are in inches.tenths

Letter locations are panel edge to lower left corner

LETTER POSITIONS (X)

															LENGTH	SERIES/SIZE
D	e	v	i	l	s		P	o	s	t	p	i	l	e		D 2000
20.2	23.6	26.2	29.5	30.9	32.1	34	38	41.1	43.9	46	48	51	52.5	53.8	35.9	4/3

REGISTERED PROFESSIONAL ENGINEER
TRAVIS JAMES HOWARD
C74036
CIVIL
STATE OF CALIFORNIA
03/26/2021

U.S. DEPARTMENT OF TRANSPORTATION
FEDERAL HIGHWAY ADMINISTRATION
CENTRAL FEDERAL LANDS HIGHWAY DIVISION

U.S. CUSTOMARY SPECIAL

SPECIAL SIGN

Sheet 18 of 27

SPECIAL
633-R

User: DENPWP03$
3:02:06 PM \\denpwp01\d$\pwicsworking\845978\1346613_19\V633-04_sp633-RRM.dgn
3/25/2021

STATE	PROJECT	SHEET NUMBER
CA	CA FLAP 03S11(1)	V20

SIGN DETAIL
1:20

Panel Style: guide_con_recreational.ssi
M.U.T.C.D.: 2009 Edition

SIGN NUMBER	Special 19
WIDTH x HGHT.	6'-3" x 1'-6"
BORDER WIDTH	0.5"
CORNER RADIUS	1.5"
MOUNTING	Ground
BACKGROUND	TYPE: Reflective
	COLOR: Brown
LEGEND/BORDER	TYPE: Reflective
	COLOR: White/White

SYMBOL	ROT	X	Y	WID	HT
AR_Type B	90	2.5	11.5	4.5	5.1
AR_Type B	270	67.9	7	4	4.6
AR_Type B	270	67.9	2	4	4.6

Panel Style: guide_con_recreational.ssi
Dimensions are in inches.tenths

Letter locations are panel edge to lower left corner

LETTER POSITIONS (X)

																																								LENGTH	SERIES/SIZE
R	E	D	S		M	E	A	D	O	W		C	A	M	P	G	R	O	U	N	D																					D 2000
8.6	11.1	13.5	16	18	21	24.1	26.2	29.2	31.8	34.3	37	40	42.4	45.4	48.5	50.9	53.6	56.1	58.9	61.7	64.4																			57.9	3
R	A	I	N	B	O	W		F	A	L	L	S		T	R	A	I	L	H	E	A	D																			D 2000
8.6	10.8	13.8	15	17.8	20.3	22.8	25.5	28.5	30.5	33.5	35.8	37.9	40	43	45.3	47.6	50.6	51.8	54.1	56.8	58.9	61.9																			55.4	3
R	E	S	O	R	T		&		P	A	C	K		S	T	A	T	I	O	N																					D 2000
8.6	11.1	13.3	15.8	18.5	20.8	22.7	25.7	28.4	31.4	33.6	36.5	39.2	41.3	44.3	46.6	48.6	51.4	53.7	54.8	57.6																					51.1	3

REGISTERED PROFESSIONAL ENGINEER
TRAVIS JAMES HOWARD
C74036
CIVIL
STATE OF CALIFORNIA
03/26/2021

U.S. DEPARTMENT OF TRANSPORTATION
FEDERAL HIGHWAY ADMINISTRATION
CENTRAL FEDERAL LANDS HIGHWAY DIVISION

U.S. CUSTOMARY SPECIAL

SPECIAL SIGN

Sheet 19 of 27

SPECIAL
633-S

User: DENPWP02$
3/25/2021 3:02:03 PM \\denpwp01\d$\pwicsworking\8459781\1346613_21\V633-04_sp633-SRM.dgn

STATE	PROJECT	SHEET NUMBER
CA	CA FLAP 03S11(1)	V21

SIGN DETAIL
1:20

Panel Style: guide_con_recreational.ssi
M.U.T.C.D.: 2009 Edition

SIGN NUMBER	Special 20
WIDTH x HGHT.	7'-4" x 3'-0"
BORDER WIDTH	0.5"
CORNER RADIUS	2.75"
MOUNTING	Ground
BACKGROUND	TYPE: Reflective
	COLOR: Brown
LEGEND/BORDER	TYPE: Reflective
	COLOR: White/White

SYMBOL	ROT	X	Y	WID	HT
AR_Type B	0	7	24.5	6.6	7.5
AR_Type B	270	71.9	8	8	9.1

Panel Style: guide_con_recreational.ssi
Dimensions are in inches.tenths

Letter locations are panel edge to lower left corner

LETTER POSITIONS (X)

| | | |

STATE	PROJECT	SHEET NUMBER
CA	CA FLAP 03S11(1)	V22

SIGN DETAIL
1:20

SIGN NUMBER	Special 21	
WIDTH x HGHT.	5'-0" x 1'-6"	
BORDER WIDTH	0.75"	
CORNER RADIUS	1.38"	
MOUNTING	Ground	
BACKGROUND	TYPE:	Reflective
	COLOR:	Yellow
LEGEND/BORDER	TYPE:	Reflective
	COLOR:	Black/Black

SYMBOL	ROT	X	Y	WID	HT

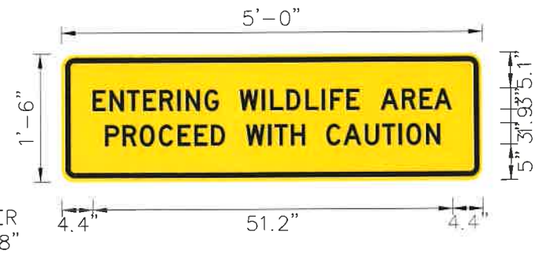

BORDER
R=1.38"
TH=0.75"
IN=0.5"

Panel Style: warning_Rectangular.ssi
M.U.T.C.D.: 2009 Edition

Panel Style: warning_Rectangular.ssi
Dimensions are in inches.tenths

Letter locations are panel edge to lower left corner

LETTER POSITIONS (X)

																						LENGTH	SERIES/SIZE
E	N	T	E	R	I	N	G		W	I	L	D	L	I	F	E		A	R	E	A		D 2000
4.4	6.8	9.2	11.6	13.9	16.5	17.7	20.4	22.4	25.4	28.5	29.7	32	34.7	37.1	38.3	40.6	42.4	45.4	48.4	51	53.1	51.2	3
P	R	O	C	E	E	D		W	I	T	H		C	A	U	T	I	O	N				D 2000
6.1	8.6	11.1	13.8	16.5	18.9	21.3	23.3	26.3	29.4	30.3	32.7	34.7	37.7	40.1	43.1	45.6	47.9	49.1	51.9			47.8	3

REGISTERED PROFESSIONAL ENGINEER
TRAVIS JAMES HOWARD
C74036
CIVIL
STATE OF CALIFORNIA
03/26/2021

U.S. DEPARTMENT OF TRANSPORTATION
FEDERAL HIGHWAY ADMINISTRATION
CENTRAL FEDERAL LANDS HIGHWAY DIVISION

U.S. CUSTOMARY SPECIAL

SPECIAL SIGN

Sheet 21 of 27

SPECIAL
633-U

User: DENPWP02$
3:02:45 PM \\denpwp01\d$\pwicsworking\845978\1346613_22\633-04_sp633-URM.dgn
3/25/2021

STATE	PROJECT	SHEET NUMBER
CA	CA FLAP 03S11(1)	V23

SIGN DETAIL
1:20

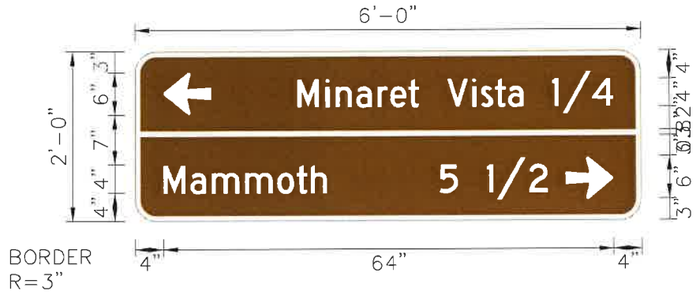

BORDER
R=3"
TH=0.75"

Panel Style: guide_fwy_recreational.ssi
M.U.T.C.D.: 2009 Edition

SIGN NUMBER	Special 22	
WIDTH x HGHT.	6'-0" x 2'-0"	
BORDER WIDTH	0.75"	
CORNER RADIUS	3"	
MOUNTING	Ground	
BACKGROUND	TYPE:	Reflective
	COLOR:	Brown
LEGEND/BORDER	TYPE:	Reflective
	COLOR:	White/White

SYMBOL	ROT	X	Y	WID	HT
AR_Type B	90	4	15	6	6.8
AR_Type B	270	61.2	3	6	6.8

Panel Style: guide_fwy_recreational.ssi
Dimensions are in inches.tenths

Letter locations are panel edge to lower left corner

LETTER POSITIONS (X)

																	LENGTH	SERIES/SIZE
M	i	n	a	r	e	t		V	i	s	t	a		1	/	4		D 2000
23	27	28.4	31.4	34.4	36.2	38.8	40.4	44.4	48	49.2	51.2	53	55.3	59.3	60.8	65	45	4/3
M	a	m	m	o	t	h					5		1	/	2			D 2000
4	7.8	10.8	15.6	20.1	22.8	24.9	27.2	31.2	35.2	39.2	43.2	46	50	51.4	56		54.7	4/3

REGISTERED PROFESSIONAL ENGINEER
TRAVIS JAMES HOWARD
C74036
CIVIL
STATE OF CALIFORNIA
03/26/2021

U.S. DEPARTMENT OF TRANSPORTATION
FEDERAL HIGHWAY ADMINISTRATION
CENTRAL FEDERAL LANDS HIGHWAY DIVISION

U.S. CUSTOMARY SPECIAL

SPECIAL SIGN

Sheet 22 of 27

SPECIAL
633-V

User: DENPWP03$
3:03:28 PM \\denpwp01\d$\pwicsworking\8459781\1346613_37\V633-04_sp633-VRM.dgn
3/25/2021

STATE	PROJECT	SHEET NUMBER
CA	CA FLAP 03S11(1)	V24

SIGN DETAIL
1:20

BORDER
R=1.38"
TH=0.75"
IN=0.5"

Panel Style: warning_Rectangular.ssi
M.U.T.C.D.: 2009 Edition

SIGN NUMBER	Special 23
WIDTH x HGHT.	6'-9" x 2'-7"
BORDER WIDTH	0.75"
CORNER RADIUS	1.38"
MOUNTING	Overhead
BACKGROUND	TYPE: Reflective
	COLOR: Yellow
LEGEND/BORDER	TYPE: Reflective
	COLOR: Black/Black

SYMBOL	ROT	X	Y	WID	HT

Panel Style: warning_Rectangular.ssi
Dimensions are in inches.tenths

Letter locations are panel edge to lower left corner

LETTER POSITIONS (X)

Letters	X positions	LENGTH	SERIES/SIZE
R O A D N O T P L O W E D	13.1 16.6 20.2 24.1 26.9 31.9 35.7 39.2 41.8 46.8 50.6 53.7 57.3 61.8 65.2	54.9	C 2000 5
S U B J E C T T O S T O R M C L O S U R E	4.4 7.4 10.6 13.2 16.5 19 21.7 23.6 28.6 31.1 33.4 38.4 40.9 43.4 46.6 49.6 52 57 60.1 62.6 65.5 68.5 71.7 74.7	72.1	B 2000 5
C L O S U R E M A Y B E W I N T E R L O N G	3 6 8.3 11.2 14 17.1 19.9 21.8 26 29.1 32 34.7 38.9 41.8 43.7 47.9 51.7 53.3 56 58.5 61.1 63.2 67.4 69.8 72.9 75.9	75	B 2000 5

REGISTERED PROFESSIONAL ENGINEER
TRAVIS JAMES HOWARD
C74036
CIVIL
STATE OF CALIFORNIA
03/26/2021

U.S. DEPARTMENT OF TRANSPORTATION
FEDERAL HIGHWAY ADMINISTRATION
CENTRAL FEDERAL LANDS HIGHWAY DIVISION

U.S. CUSTOMARY SPECIAL

SPECIAL SIGN

Sheet 23 of 27

SPECIAL
633-W

User: DENPWP01$
3/25/2021 3:02:55 PM \\denpwp01\d$\pwicsworking\8459781\1346613_40\V633-04_sp633-WRM.dgn

STATE	PROJECT	SHEET NUMBER
CA	CA FLAP 03S11(1)	V25

SIGN DETAIL
1:20

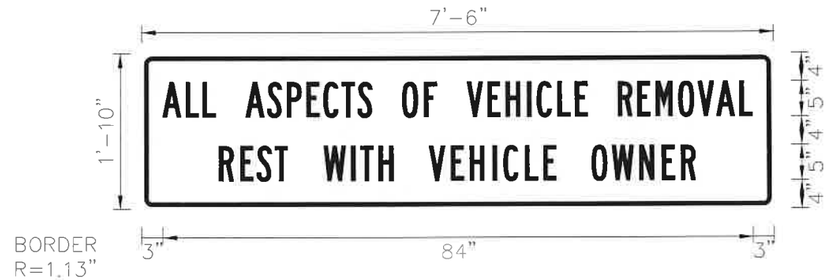

BORDER
R=1.13"
TH=0.63"
IN=0.38"

Panel Style: regulatory.ssi
M.U.T.C.D.: 2009 Edition

SIGN NUMBER	Special 24	
WIDTH x HGHT.	7'-6" x 1'-10"	
BORDER WIDTH	0.63"	
CORNER RADIUS	1.13"	
MOUNTING	Overhead	
BACKGROUND	TYPE:	Reflective
	COLOR:	White
LEGEND/BORDER	TYPE:	Reflective
	COLOR:	Black/Black

SYMBOL	ROT	X	Y	WID	HT

Panel Style: regulatory.ssi
Dimensions are in inches.tenths

Letter locations are panel edge to lower left corner

LETTER POSITIONS (X)

																																						LENGTH	SERIES/SIZE
A	L	L		A	S	P	E	C	T	S		O	F		V	E	H	I	C	L	E		R	E	M	O	V	A	L										B 2000
3	6.3	8.8	10.7	14.9	17.9	20.7	23.5	25.9	28.5	30.7	32.9	37.1	40.2	42.1	46.3	49.2	51.8	54.8	56.3	59.2	61.7	63.6	67.8	70.6	73.2	76.5	79.2	81.8	85.1								84	5
R	E	S	T		W	I	T	H		V	E	H	I	C	L	E		O	W	N	E	R																B 2000
11.1	14	16.4	19	20.9	25.9	29.8	31.1	33.7	35.9	40.9	43.9	46.6	49.9	51.5	54.6	57.2	59.1	64.1	66.9	70.8	74.1	76.8															67.9	5

REGISTERED PROFESSIONAL ENGINEER
TRAVIS JAMES HOWARD
C74036
CIVIL
STATE OF CALIFORNIA
03/26/2021

U.S. DEPARTMENT OF TRANSPORTATION
FEDERAL HIGHWAY ADMINISTRATION
CENTRAL FEDERAL LANDS HIGHWAY DIVISION

U.S. CUSTOMARY SPECIAL

SPECIAL SIGN

Sheet 24 of 27

SPECIAL
633-X

User: DENPWP02$_
3:03:10 PM \\denpwp01\d$\pwicsworking\845978\1346613_41\V633-04_sp633-XRM.dgn
3/25/2021

STATE	PROJECT	SHEET NUMBER
CA	CA FLAP 03S11(1)	V26

SIGN DETAIL
1:20

SIGN NUMBER	name	
WIDTH x HGHT,	6'-0" x 2'-0"	
BORDER WIDTH	0.75"	
CORNER RADIUS	1.38"	
MOUNTING	Overhead	
BACKGROUND	TYPE:	Reflective
	COLOR:	Yellow
LEGEND/BORDER	TYPE:	Reflective
	COLOR:	Black/Black

SYMBOL	ROT	X	Y	WID	HT

Panel Style: warning_Rectangular.ssi
M.U.T.C.D.: 2009 Edition

Panel Style: warning_Rectangular.ssi
Dimensions are in inches.tenths

Letter locations are panel edge to lower left corner

LETTER POSITIONS (X)

																																						LENGTH	SERIES-SIZE
N	O		S	H	O	O	T	I	N	G		A	R	E	A																								C 2000
7.5	11.3	14.3	19.3	22.9	26.7	30.6	34.1	37.4	39.2	43	45.8	50.8	54.7	58.3	61.3																							57	5
M	O	N	O		C	O	U	N	T	Y		O	R	D	.	1	0	.	6	4																			B 2000
5.5	8.9	12.2	15.3	17.6	22.6	25.5	28.8	32	34.9	37.1	39.8	44.8	48	51	53.7	55.1	57.1	60	61.2	64																		61	5
T	O	W	N		O	F		M	A	M	M	O	T	H		L	A	K	E	S		O	R	D	.	9	.	0	8										B 2000
3	5.1	7.5	10.9	13.1	14.6	17.2	19.1	20.6	23.2	26.1	28.9	31.6	34.1	36.2	38.4	39.9	41.9	44.8	47.2	49.2	51.4	52.9	55.5	57.9	60.2	61.1	63.4	64.4	66.9									66	5

REGISTERED PROFESSIONAL ENGINEER
TRAVIS JAMES HOWARD
C74036
CIVIL
STATE OF CALIFORNIA
03/26/2021

U.S. DEPARTMENT OF TRANSPORTATION
FEDERAL HIGHWAY ADMINISTRATION
CENTRAL FEDERAL LANDS HIGHWAY DIVISION

U.S. CUSTOMARY SPECIAL

SPECIAL SIGN

Sheet 25 of 27

SPECIAL
633-Y

User: DENPWP02$
3:02:44 PM \\denpwp01\d$\pwicsworking\8459978\1346613_42\V633-04_sp633-YRM.dgn
3/25/2021

STATE	PROJECT	SHEET NUMBER
CA	CA FLAP 03S11(1)	V27

SIGN DETAIL
1:20

BORDER
R=1.13"
TH=0.63"
IN=0.38"

Panel Style: regulatory.ssi
M.U.T.C.D.: 2009 Edition

Panel Style: regulatory.ssi
Dimensions are in inches.tenths

SIGN NUMBER	Special 27
WIDTH x HGHT.	4'-9" x 3'-0"
BORDER WIDTH	0.63"
CORNER RADIUS	1.13"
MOUNTING	Ground
BACKGROUND	TYPE: Reflective
	COLOR: White
LEGEND/BORDER	TYPE: Reflective
	COLOR: Black/Black

SYMBOL	ROT	X	Y	WID	HT

Letter locations are panel edge to lower left corner

LETTER POSITIONS (X)

															LENGTH	SERIES/SIZE
I	N		L	I	N	E		S	K	A	T	E	S			D 2000
7.4	9	11.8	15.8	18.8	20.4	24.1	26.6	30.6	34	37.1	40.8	43.8	46.7		42	4
S	K	A	T	E	B	O	A	R	D	S		A	N	D		D 2000
3	6.4	9.5	13.2	16.2	19.4	22.7	26.1	30.1	33.5	36.8	39.5	43.5	47.5	51.2	50.9	4
S	I	M	I	L	A	R		D	E	V	I	C	E	S		D 2000
6	9.4	11	15.1	16.7	19.4	23.4	26.1	30.1	33.7	36.5	40.2	41.7	45.3	48.2	44.9	4
P	R	O	H	I	B	I	T	E	D							D 2000
13.8	17.2	20.5	24.2	27.9	29.5	32.9	34.1	37.2	40.4						29.2	4
3	6		C	F	R		2	6	1	.	5	4	(	b	)	C 2000
18.4	19.8	20.9	22.9	24.4	25.7	26.8	28.8	30.3	31.7	32.5	33	34.3	35.9	36.7	38	20.2	2/1.5

REGISTERED PROFESSIONAL ENGINEER
TRAVIS JAMES HOWARD
C74036
CIVIL
STATE OF CALIFORNIA

03/26/2021

U.S. DEPARTMENT OF TRANSPORTATION
FEDERAL HIGHWAY ADMINISTRATION
CENTRAL FEDERAL LANDS HIGHWAY DIVISION

U.S. CUSTOMARY SPECIAL

SPECIAL SIGN

Sheet 26 of 27

SPECIAL
633-Z

STATE	PROJECT	SHEET NUMBER
CA	CA FLAP 03S11(1)	V28

SIGN DETAIL
1:20

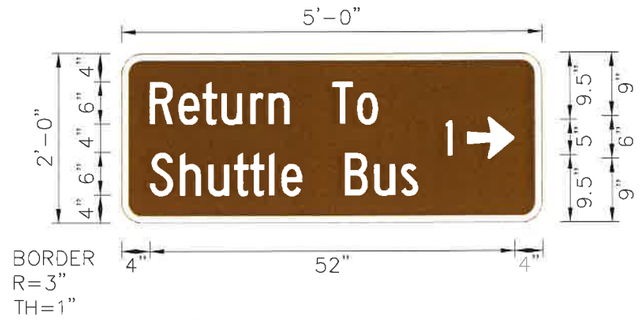

Panel Style: guide_fwy_recreational.ssi
M.U.T.C.D.: 2009 Edition

SIGN NUMBER	name	
WIDTH x HGHT.	5'-0" x 2'-0"	
BORDER WIDTH	1"	
CORNER RADIUS	3"	
MOUNTING	Ground	
BACKGROUND	TYPE:	Reflective
	COLOR:	Brown
LEGEND/BORDER	TYPE:	Reflective
	COLOR:	White/White

SYMBOL	ROT	X	Y	WID	HT
AR_Type B	270	49.2	9	6	6.8

Panel Style: guide_fwy_recreational.ssi
Dimensions are in inches.tenths

Letter locations are panel edge to lower left corner

LETTER POSITIONS (X)

																																						LENGTH	SERIES/SIZE
R	e	t	u	r	n		T	o																															C 2000
4	8.1	11.4	14.1	18.3	20.9	24	30	33.6																														32.6	6/4.5
1																																							C 2000
46.1																																						1.1	5
S	h	u	t	t	l	e		B	u	s																													C 2000
4	8.3	12.3	15.9	18.2	21	22.7	25.8	31.8	36	39.8																												38.3	6/4.5

REGISTERED PROFESSIONAL ENGINEER
TRAVIS JAMES HOWARD
C74036
CIVIL
STATE OF CALIFORNIA
03/26/2021

U.S. DEPARTMENT OF TRANSPORTATION
FEDERAL HIGHWAY ADMINISTRATION
CENTRAL FEDERAL LANDS HIGHWAY DIVISION

U.S. CUSTOMARY SPECIAL

SPECIAL SIGN

Sheet 27 of 27

SPECIAL
633-Za

User: DENPWP01$
3/25/2021 3:03:03 PM \\denpwp01\d$\pwicsworking\8459781\1346613_48\V633-04_sp633-ZRMa.dgn

STATE	PROJECT	SHEET NUMBER
CA	CA FLAP 03S11(1)	V29

NOTES:

1. Metal Post and Snow Pole Bracket paid as an Each item under 63318-1000, Snow Pole Holder.
2. Object Marker paid as an Each item under 63308-0000, Object Marker.
3. Final location of Snow Pole Holders to be determined by the CO in the field in coordination with the town of Mammoth Lakes maintenance staff.
4. Install object marker adjacent to culvert inlet and outlet.

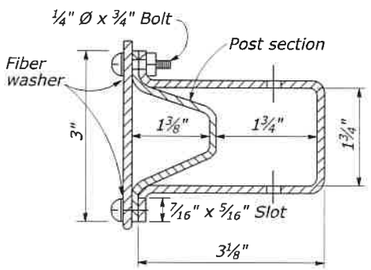

TOP VIEW

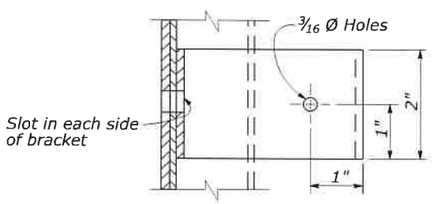

Bracket to be ⅛" x 2" mild steel galvanized after fabrication

SIDE VIEW

SNOW POLE BRACKET

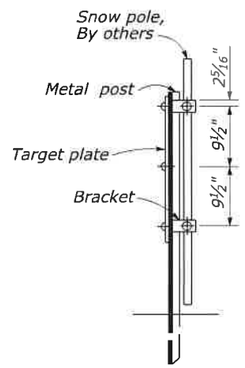

POST SIDE VIEW

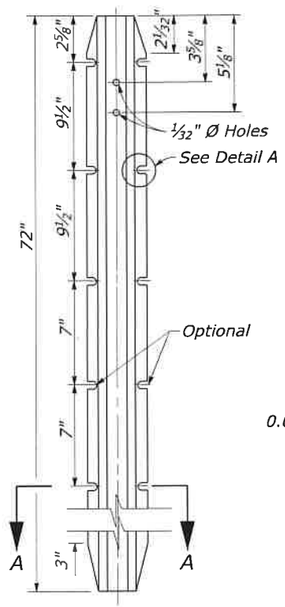

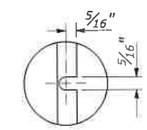

DETAIL A

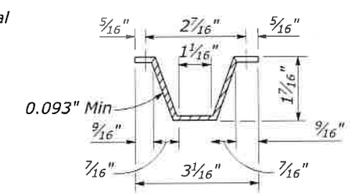

SECTION A-A

Metal post to be as shown except that minor variations in design and dimensions will be permitted to meet manufacturer's standards.

METAL POST DETAIL

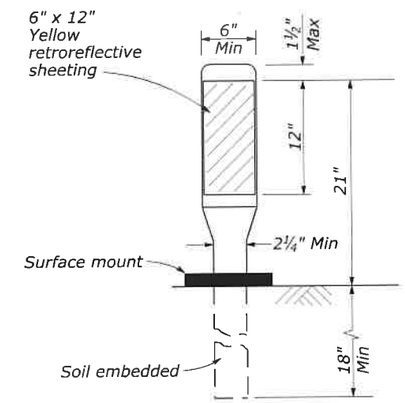

OBJECT MARKER

(Flexible post with vertical orientation of sheeting)

REGISTERED PROFESSIONAL ENGINEER
TRAVIS JAMES HOWARD
C74036
CIVIL
STATE OF CALIFORNIA
03/26/2021

ADAPTED FROM CALTRANS STANDARD PLAN A73A & A73B

NO SCALE

U.S. DEPARTMENT OF TRANSPORTATION
FEDERAL HIGHWAY ADMINISTRATION
CENTRAL FEDERAL LANDS HIGHWAY DIVISION

U.S. CUSTOMARY SPECIAL

MARKERS

SPECIAL
633-Zb

User: DENPWP01$_
3:02:33 PM \\denpwp01\d$\pwicsworking\845978\1346613_39\V633-04_sp633-ZRMb.dgn
3/25/2021

STATE	PROJECT	SHEET NUMBER
CA	CA FLAP 03S11(1)	V30

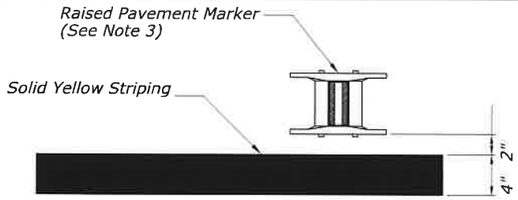

DETAIL A

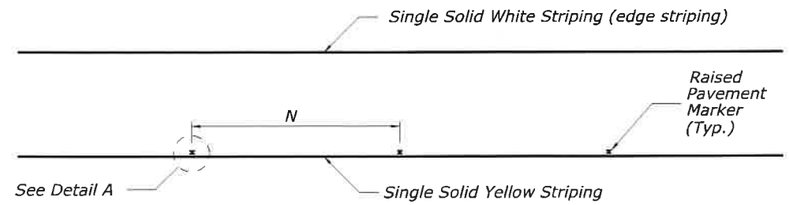

SINGLE SOLID YELLOW STRIPING WITH RAISED PAVEMENT MARKERS

NOTES:

1. Install striping in accordance with the Manual on Uniform Traffic Control Devices (MUTCD), Latest Edition.
2. When raised pavement markers are required, space and install in accordance with the MUTCD and as shown in this detail or as directed by the CO.
3. When raised pavement markers are required, see Detail E634-02.

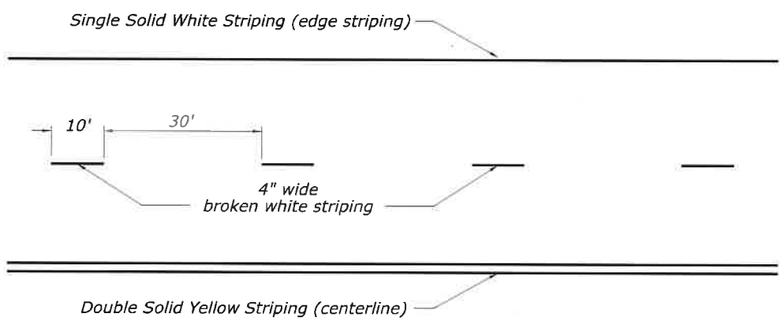

BROKEN SINGLE WHITE AND DOUBLE SOLID YELLOW STRIPING

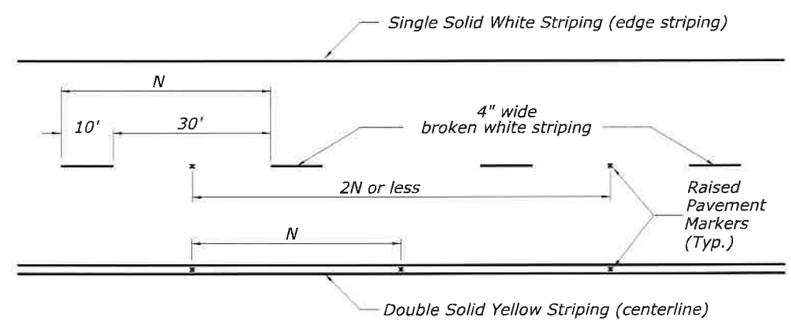

BROKEN SINGLE WHITE AND DOUBLE SOLID YELLOW STRIPING WITH RAISED PAVEMENT MARKERS

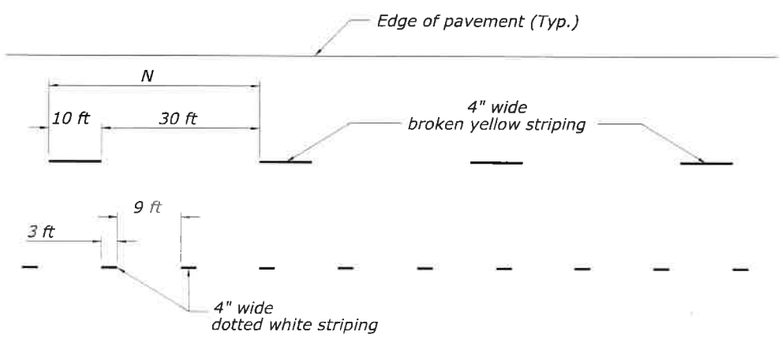

BROKEN SINGLE YELLOW AND DOTTED WHITE STRIPING

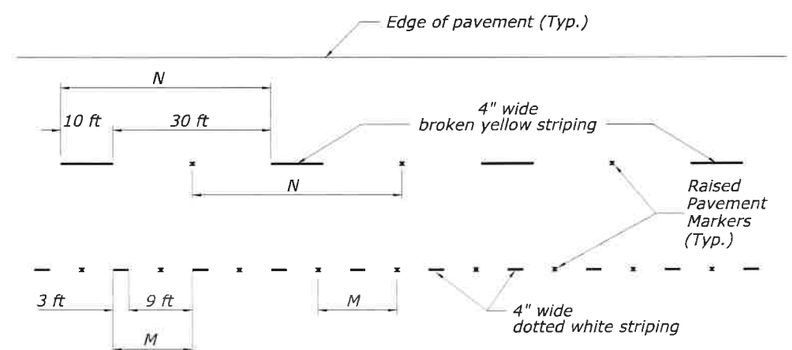

BROKEN SINGLE YELLOW AND DOTTED WHITE STRIPING WITH RAISED PAVEMENT MARKERS

NO SCALE

REGISTERED PROFESSIONAL ENGINEER
TRAVIS JAMES HOWARD
C74036
CIVIL
STATE OF CALIFORNIA
03/26/2021

FOR SELECTION ONLY

U.S. DEPARTMENT OF TRANSPORTATION
FEDERAL HIGHWAY ADMINISTRATION
CENTRAL FEDERAL LANDS HIGHWAY DIVISION

U.S. CUSTOMARY DETAIL

PAVEMENT MARKINGS WITH AND WITHOUT RAISED PAVEMENT MARKERS

DETAIL APPROVED FOR USE

APPROVED : MAY 2011
REVISED: AUGUST 2015

DETAIL
E634-03

User: DENPWP03$_
3:01:43 PM \\denpwp01\d$\pwicsworking\845978\1346613_5\V634-02_st634-03RM.dgn
3/25/2021

STATE	PROJECT	SHEET NUMBER
CA	CA FLAP 03S11(1)	V31

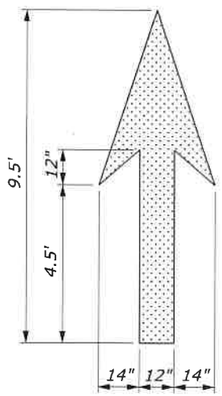

THROUGH LANE-USE ARROW

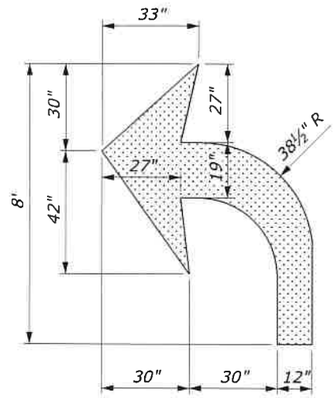

TURN LANE-USE ARROW

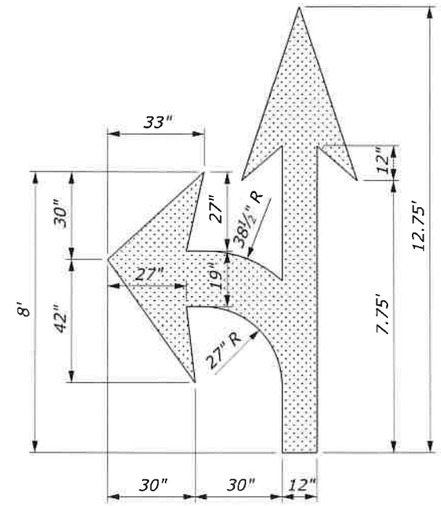

TURN AND THROUGH LANE-USE ARROW

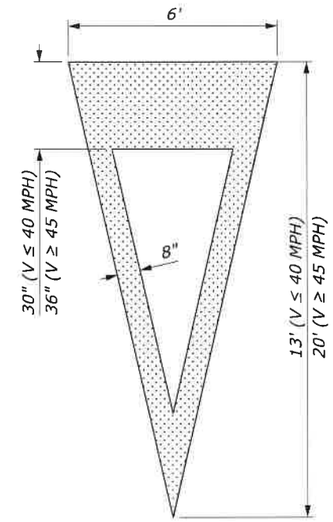

YIELD AHEAD TRIANGLE SYMBOL

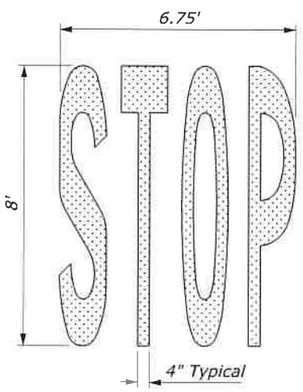

"STOP" WORD MARKING

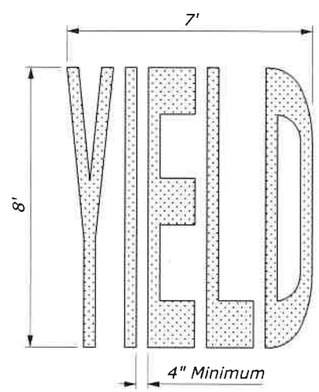

"YIELD" WORD MARKING

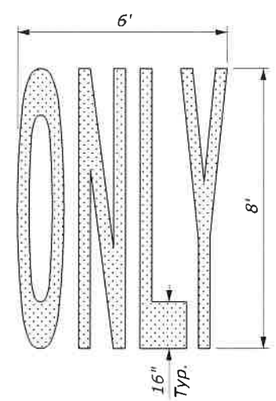

"ONLY" WORD MARKING

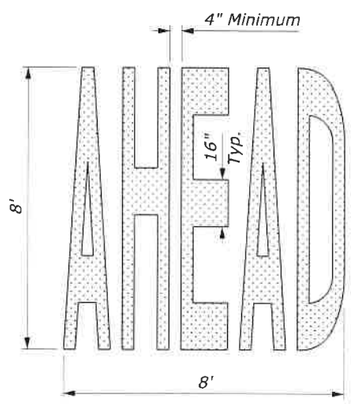

"AHEAD" WORD MARKING

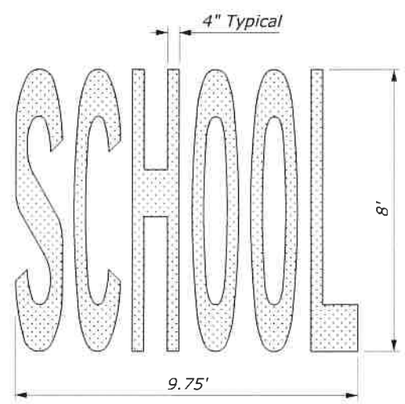

"SCHOOL" WORD MARKING

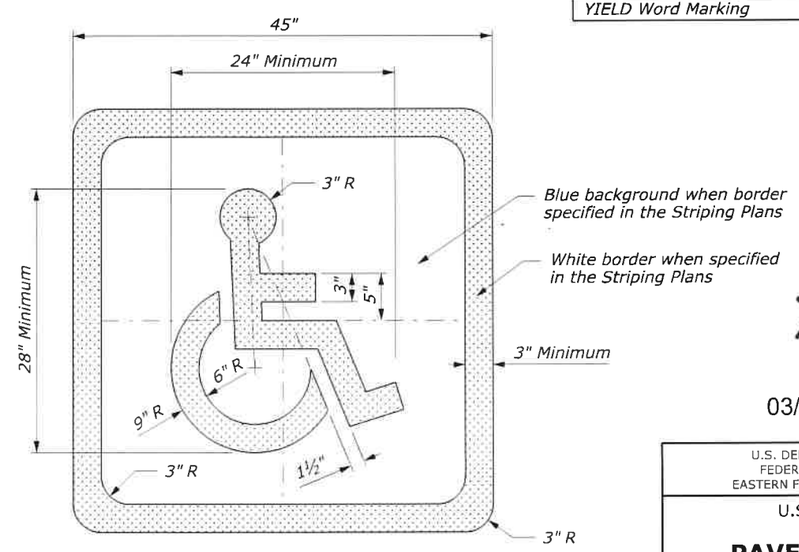

ACCESSIBILITY PARKING SPACE SYMBOL

NO SCALE

NOTES:

1. *Place pavement word and symbol markings in accordance with the "Manual on Uniform Traffic Control Devices" (MUTCD), current edition.*
2. *Place all letters, numerals and symbols according to the "Standard Highway Signs", current edition.*
3. *The Accessibility Parking Space Marking includes the accessibility symbol only, unless a border is specified in the Striping Plans.*

PAVEMENT MARKING AREAS

TYPE	SQFT
Through Lane-Use Arrow	12
Turn Lane-Use Arrow	16
Turn and Through Lane-Use Arrow	26
Yield Ahead Arrow (V<45 mph)	26
Yield Ahead Arrow (V≥45 mph)	37
Accessibility Marking (symbol only)	2
Accessibility Marking w/ border (White)	5
Accessibility Marking w/ border (Blue)	9
AHEAD Word Marking	30
ONLY Word Marking	21
SCHOOL Word Marking	33
STOP Word Marking	22
YIELD Word Marking	24

REGISTERED PROFESSIONAL ENGINEER TRAVIS JAMES HOWARD C74036 CIVIL STATE OF CALIFORNIA

03/26/2021

FOR SELECTION ONLY

U.S. DEPARTMENT OF TRANSPORTATION
FEDERAL HIGHWAY ADMINISTRATION
EASTERN FEDERAL LANDS HIGHWAY DIVISION

U.S. CUSTOMARY DETAIL

PAVEMENT MARKINGS SYMBOLS AND WORDS

DETAIL APPROVED FOR USE

APPROVED : MAY 2011
REVISED: MARCH 2015

DETAIL E634-01

User: DENPWP03$
3:02:35 PM \\denpwp01\ds\pwicsworking\8459781\1346613_11\V634-03_det634-01RM.dgn
3/25/2021

STATE	PROJECT	SHEET NUMBER
CA	CA FLAP 03S11(1)	V32

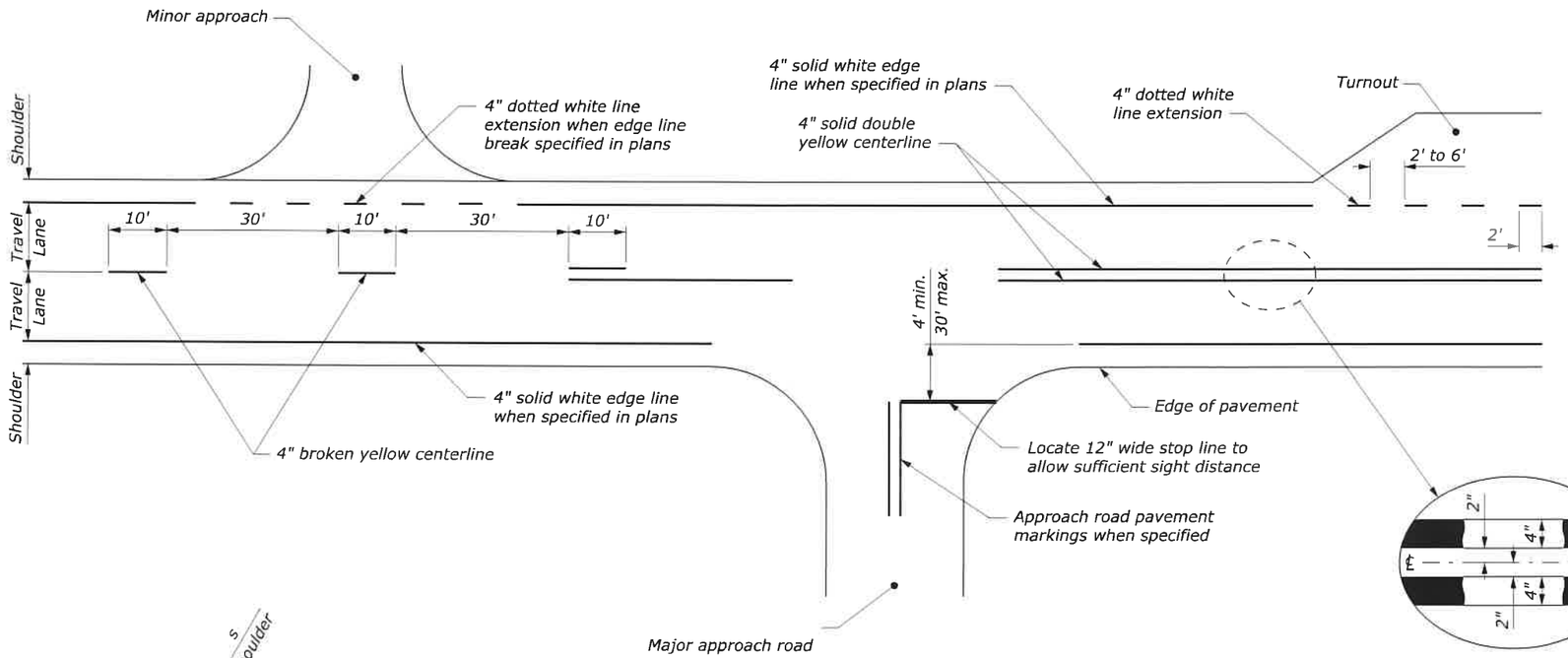

TYPICAL PAVEMENT MARKING APPLICATIONS

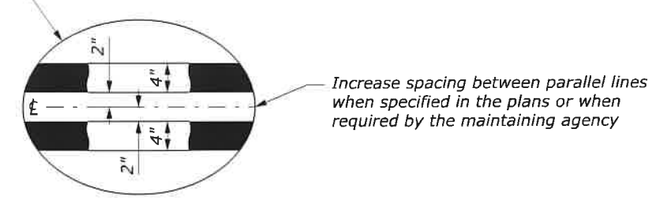

CENTERLINE DETAIL

NOTE:

1. Place edge line pavement markings at asphalt/concrete curb interface when curb is present.
2. Paint centerline pavement markings on curves with curve widening "w" to achieve equal lane widths within the roadway. Maintain a constant shoulder width "s" throughout the curve widening area. See staking details for curve widening transition locations.
3. Typical pavement marking widths are shown. Use wider pavement markings when specified on the plans or when required by the maintaining agency.

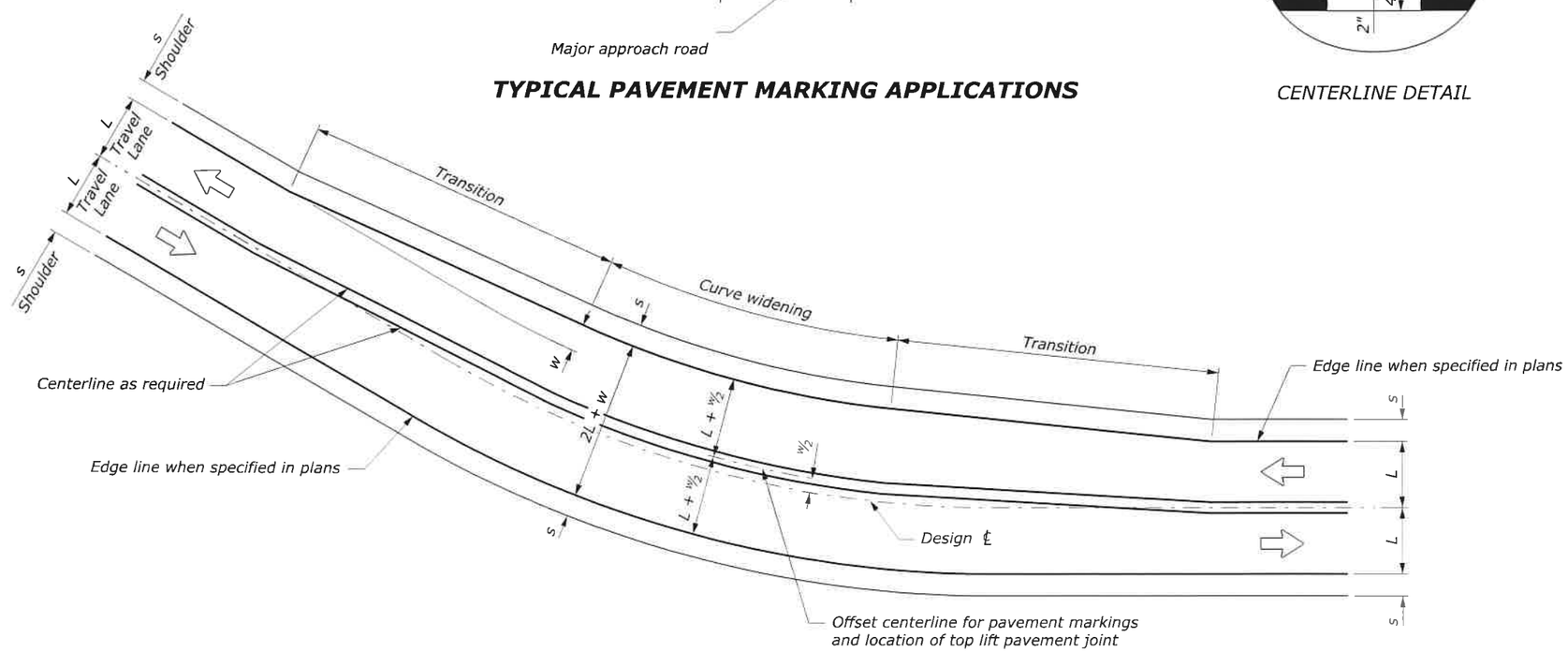

CENTERLINE MODIFICATION FOR CURVES WITH WIDENING APPLIED ON INSIDE

See Note 2 for treatment of curves when widening "w" is split equally on both sides of centerline

NO SCALE

REGISTERED PROFESSIONAL ENGINEER TRAVIS JAMES HOWARD C74036 CIVIL STATE OF CALIFORNIA

03/26/2021

FOR SELECTION ONLY

U.S. DEPARTMENT OF TRANSPORTATION
FEDERAL HIGHWAY ADMINISTRATION
CENTRAL FEDERAL LANDS HIGHWAY DIVISION

U.S. CUSTOMARY DETAIL

LINEAR PAVEMENT MARKINGS

DETAIL APPROVED FOR USE 10/2007
REVISED: 10/2012

DETAIL W634-2

User: DENPWP02$
3:01:46 PM \\denpwp01\d$\pwicsworking\845978\1346613_1\V634-03_det634-02RM.dgn
3/25/2021

STATE	PROJECT	SHEET NUMBER
CA	CA FLAP 03S11(1)	V33

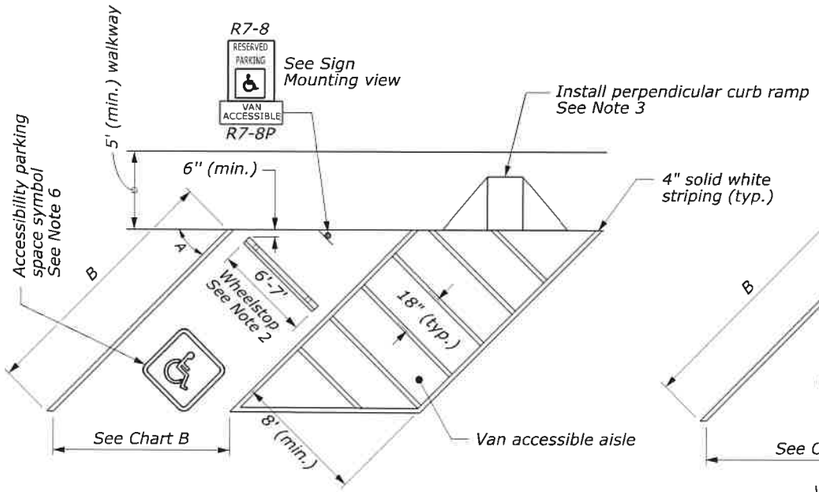

SINGLE PARKING SPACE

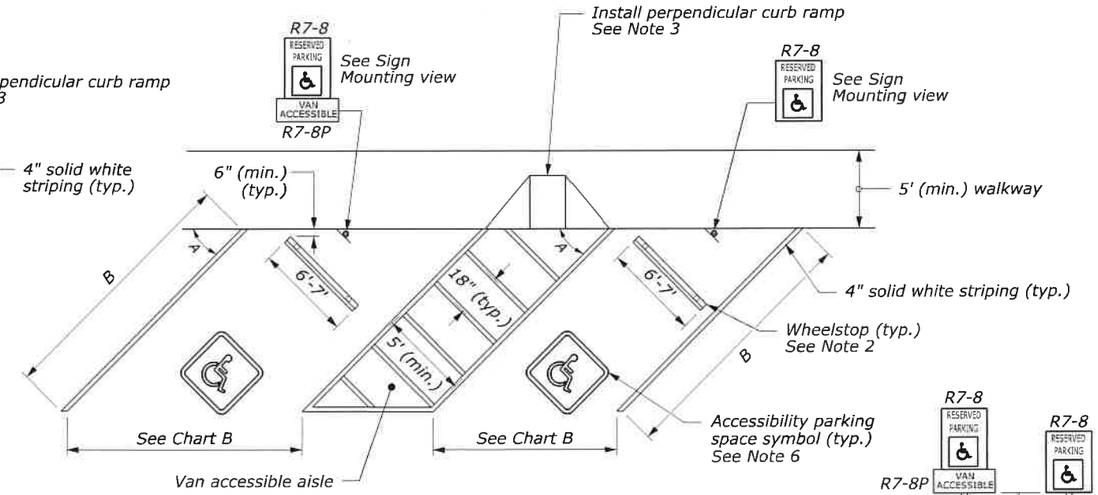

DOUBLE PARKING SPACE

ANGULAR PARKING WITH VAN ACCESSIBLE AISLE

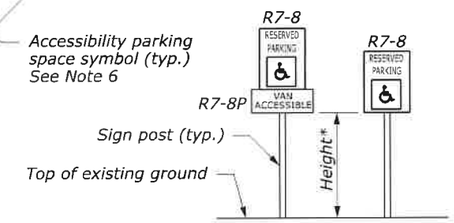

SIGN MOUNTING

* See Notes 4 and 5

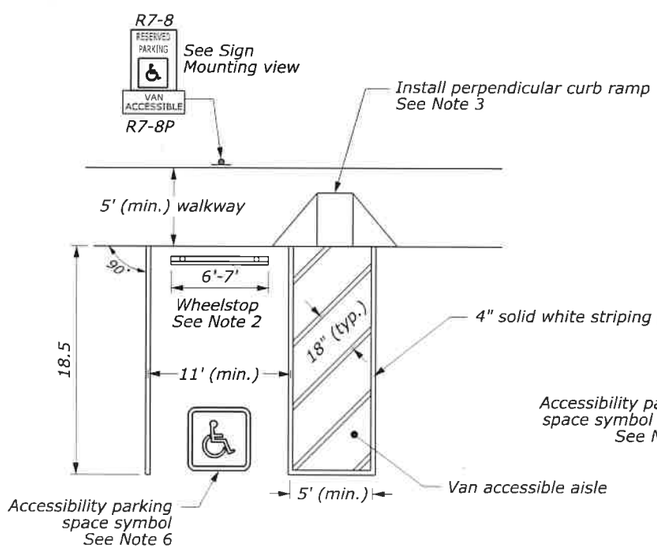

SINGLE PARKING SPACE

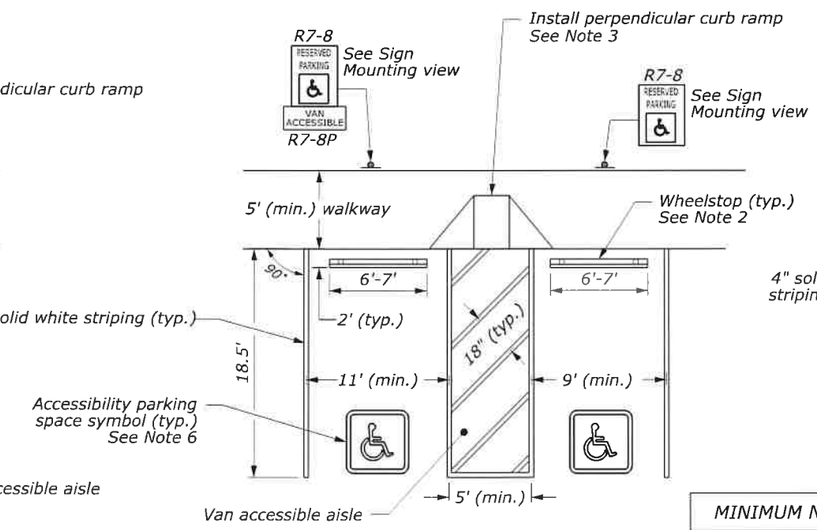

DOUBLE PARKING SPACE

HEAD-ON PARKING WITH VAN ACCESSIBLE AISLE

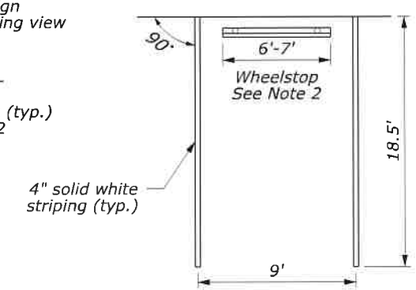

HEAD-ON PARKING

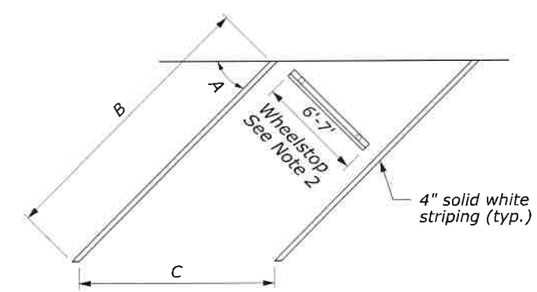

ANGULAR PARKING

CHART A

MINIMUM NUMBER OF ACCESSIBLE PARKING SPACES*		
Total Parking Spaces in Parking Facility	Minimum Number of Accessible Spaces	Minimum Number of Van-Accessible Spaces
1 to 25	1	1
26 to 50	2	1
51 to 75	3	1
76 to 100	4	1
101 to 150	5	1
151 to 200	6	1
201 to 300	7	2
301 to 400	8	2
401 to 500	9	2
501 to 1,000	2% of Total Parking Spaces	One out of every 6 Accessible Spaces
Over 1,000	20 Plus 1 for each 100 over 1,000	One out of every 6 Accessible Spaces

* Chart A based on "2010 ADA Standards for Accessible Design Standard (Table 208.02)" and "2015 ABA Standards (Table F208.2)".

CHART B

PARKING LAYOUT DIMENSIONS FOR 9-FOOT STALLS*				
Angle (A)	45°	60°	75°	90°
Minimum Length of Stall (B)	25'	22'	20'	18.5'
Stall Width (C), Parallel to Aisle	12.7'	10.4'	9.3'	9.0'

* Chart B based on dimensions recommended in "Parking Principles, Special Report 125 (Figure 6.2)".

NOTES:

1. Install pavement striping and symbol markings in accordance with the "Manual on Uniform Traffic Control Devices for Streets and Highways" (MUTCD), latest edition.
2. Install concrete wheelstops according to Section 609 and Detail E609-02. Install plastic and other types of wheelstops according to the manufacturer's recommendations.
3. Install perpendicular curb ramp when curb is located between the van accessible aisle and the walkway. Refer to Detail ET 615-1 for curb ramps details.
4. Refer to Detail E633-01 for sign mounting details. For signs installed in rural areas, provide a minimum height of 5 feet. For signs installed in business, commercial, or residential areas, provide a minimum height of 7 feet.
5. Refer to Section 2A.18 of the MUTCD for additional sign mounting information.
6. Refer to Detail E634-01 for accessibility parking space symbol details.

REGISTERED PROFESSIONAL ENGINEER TRAVIS JAMES HOWARD C74036 CIVIL STATE OF CALIFORNIA

NO SCALE 03/26/2021

FOR SELECTION ONLY

U.S. DEPARTMENT OF TRANSPORTATION
FEDERAL HIGHWAY ADMINISTRATION
CENTRAL FEDERAL LANDS HIGHWAY DIVISION

U.S. CUSTOMARY DETAIL

PAVEMENT MARKINGS AND SIGNING IN PARKING AREAS

DETAIL APPROVED FOR USE
APPROVED: MAY 2011
REVISED: FEBRUARY 2019

DETAIL E634-05

User: DENPWP01$_
3:02:16 PM \\denpwp01\ds\pwicsworking\845978\1346613_121\V634-03_det634-05RM.dgn
3/25/2021

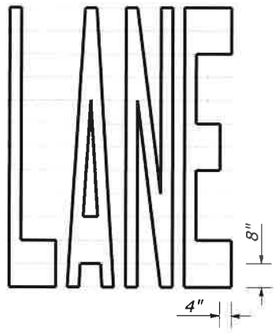

A=24 ft*

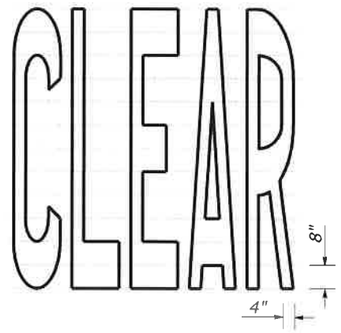

A=27 ft*

A=21 ft*

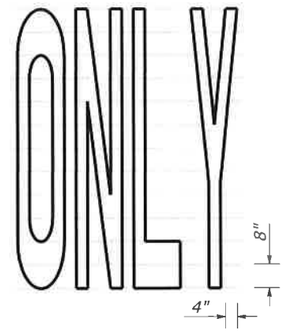

A=22 ft*

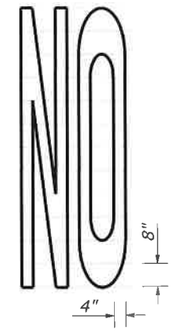

A=14 ft*

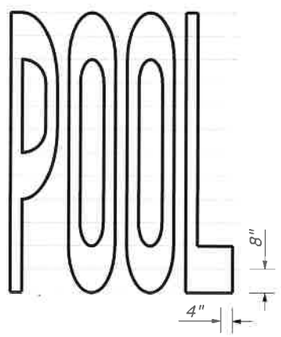

A=23 ft*

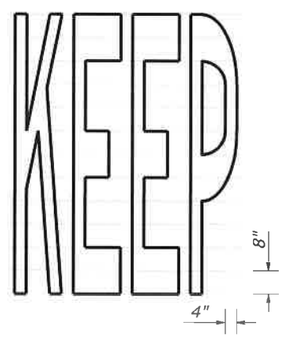

A=24 ft*

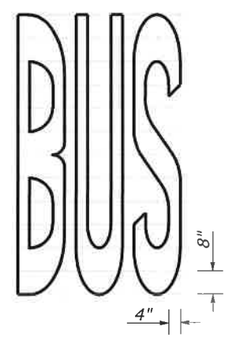

A=20 ft*

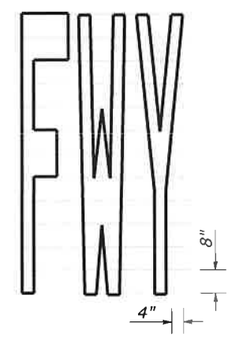

A=16 ft*

A=17 ft*

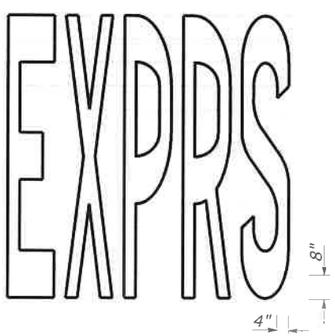

A=30 ft*

A=23 ft*

A=18 ft*

A=2 ft*

See Notes 5 and 6

WORD MARKINGS			
ITEM	ft*	ITEM	ft*
LANE	24	NO	14
POOL	23	BIKE	21
CAR	17	BUS	20
CLEAR	27	ONLY	22
KEEP	24	FWY	16
HOV	18	EXPRS	30
TRAIL	23		

NOTES:

1. *If a message consists of more than one word, it must read "UP",i.e., the first word must be nearest the driver.*
2. *The space between words must be at least four times the height of the characters for low speed roads, but not more than ten times the height of the characters. The space may be reduced appropriately where there is limited space because of local conditions.*
3. *Minor variations in dimensions may be accepted by the Engineer.*
4. *Portions of a letter, number or symbol may be separated by connecting segments not to exceed 2" in width.*
5. *The words "NO PARKING" pavement marking is to be used for parking facilities. For typical locations of markings, see Standard Plans A90A and A90B.*
6. *The words "NO PARKING", shall be painted in white letters no less than 1'-0" high on a contrasting background and located so that it is visible to traffic enforcement officials.*

REGISTERED PROFESSIONAL ENGINEER
TRAVIS JAMES HOWARD
C74036
CIVIL
STATE OF CALIFORNIA

03/26/2021

ADAPTED FROM CALTRANS STANDARD PLAN A24E

NO SCALE

U.S. DEPARTMENT OF TRANSPORTATION
FEDERAL HIGHWAY ADMINISTRATION
CENTRAL FEDERAL LANDS HIGHWAY DIVISION

U.S. CUSTOMARY SPECIAL

PAVEMENT MARKINGS WORDS

SPECIAL
634-A

_User: DENPWP02$
3:03:29 PM \\denpwp01\d$\pwicsworking\8459781\346613_44\V634-04_sp634-ARM.dgn
3/25/2021

STATE	PROJECT	SHEET NUMBER
CA	CA FLAP 03S11(1)	V35

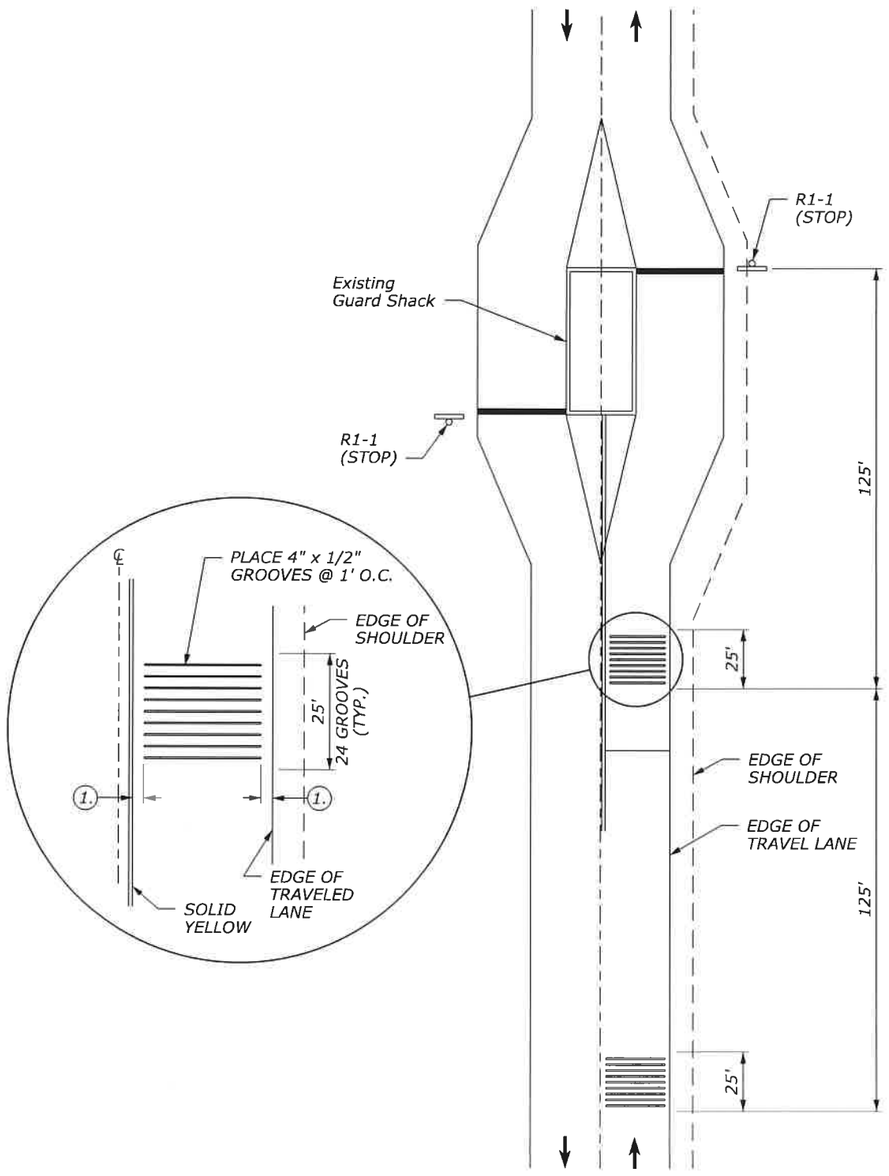

ARROW SYMBOL (→) SHOWS DIRECTION OF TRAVEL

PLAN VIEW

RUMBLE STRIP LOCATION

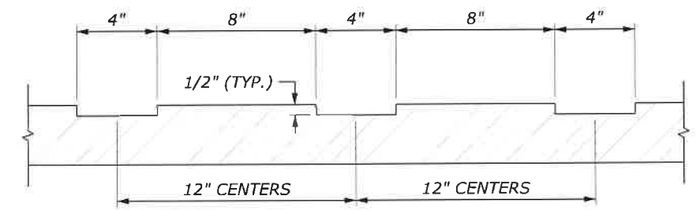

RUMBLE STRIP GROOVES IN HMA
24 STRIPS PER CLUSTER (TYP.)

ELEVATION VIEW

NOTES:

1. 12" clear between the edge of lane and edge of rumble strip.
2. Confirm rumble strip location with the CO prior to installation.

03/26/2021

U.S. DEPARTMENT OF TRANSPORTATION
FEDERAL HIGHWAY ADMINISTRATION
CENTRAL FEDERAL LANDS HIGHWAY DIVISION

U.S. CUSTOMARY SPECIAL

TRANSVERSE RUMBLE STRIPS

NO SCALE

SPECIAL
634-B

User: DENPWP03$
3:02:29 PM \\denpwp01\d$\pwicsworking\845978\1346613_45\V634-04_sp634-BRM.dgn
3/25/2021

STATE	PROJECT	SHEET NUMBER
CA	CA FLAP 03S11(1)	V36

SIGN SPACING TABLE

ROAD TYPE	DISTANCE BETWEEN SIGNS IN FEET		
	A	B	C
Urban and Rural 30 MPH and less	100	100	100
Urban and Rural 35 MPH to 50 MPH	350	350	350
Rural greater than 50 MPH	500	500	500
Expressway / Freeway	1000	1500	2640

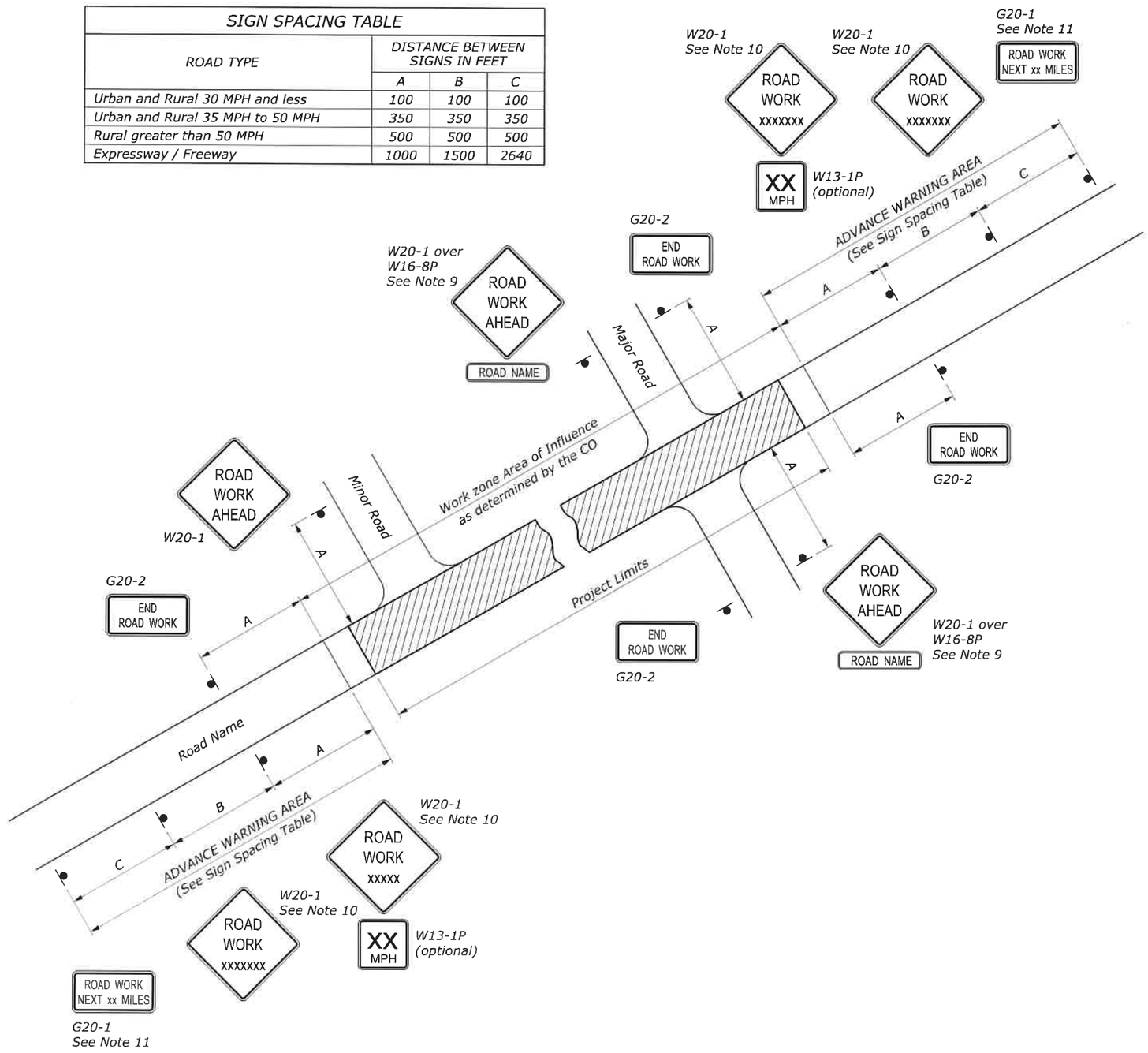

NOTE:

1. Erect all project advance warning signs before starting construction work.
2. Not all details shown on the temporary traffic control sheets may be applicable to this project. The Contractor may add or delete information and details in this traffic control plan as necessary to accommodate actual operations.
3. Where advance warning signs, placed as shown, interfere with permanent signs, locate the warning signs as determined by the CO for best results. Vary messages as required.
4. Additional or different message signs may be required to fit the actual construction conditions.
5. Install advisory speed plates under the W20 series warning signs as needed to indicate a maximum recommended speed through the construction area.
6. Ensure all sign supports exposed to impact by traffic meet the requirements of NCHRP-350 or MASH for crashworthiness.
7. Maintain two-way traffic during all non-work hours except as approved by the CO.
8. Do not store traffic control devices along the roadway when not in use. Cover post-mounted signs when not applicable.
9. If W20-1 is placed on a roadway other than that on which the actual construction work occurs, include a supplementary plaque indicating the name of the road on which the construction does occur (applies to major roads only).
10. The message on the W20-1 signs may be "ROAD WORK AHEAD" or may specify the distance to the work area in feet or in miles. Install an additional W20-1 sign when approach speeds exceed 50 MPH. When used place the two W20-1 signs "B" feet apart according to the Sign Spacing Table.
11. For work zones that are 2 miles or more in length, install G20-1 signs at each end of the project. Show the distance on the G20-1 sign to the nearest whole mile.
12. If signing on a roadway under a jurisdiction other than the client agency, verify that an encroachment permit has been obtained.
13. State standards may be used as an alternative if approved by the CO.
14. Refer to the Section 635 of the Special Contract Requirements for allowable retroreflective sheeting types.

REGISTERED PROFESSIONAL ENGINEER
TRAVIS JAMES HOWARD
C74036
CIVIL
STATE OF CALIFORNIA

03/26/2021
FOR SELECTION ONLY

NO SCALE

U.S. DEPARTMENT OF TRANSPORTATION
FEDERAL HIGHWAY ADMINISTRATION
CENTRAL FEDERAL LANDS HIGHWAY DIVISION

U.S. CUSTOMARY DETAIL

TEMPORARY TRAFFIC CONTROL ADVANCE SIGNING

STANDARD APPROVED FOR USE 6/2005
REVISED:
DRAFT: 6/2014

DETAIL
635-1

User: DENPWP01$
3/25/2021 3:02:45 PM \\denpwp01\d$\pwicsworking\8459781\1346613_8\V635-02_st635-1RM.dgn

LENGTH AND SPACING TABLE				
APPROACH SPEED*	BUFFER SPACE LENGTH	CHANNELIZING DEVICE		
		TAPER AREA	BUFFER SPACE	WORK SPACE
MPH	FEET	SPACING IN FEET		
20	115	20	40	40
25	155	20	50	50
30	200	20	60	60
35	250	20	70	70
40	305	20	80	80
45	360	20	90	90
50	425	20	100	100
55	495	20	110	110
60	570	20	120	120
65	645	20	130	130
70	730	20	140	140

* Approach speed based on the regulatory posted speed, not the advisory speed.

SIGN SPACING TABLE			
ROAD TYPE	DISTANCE BETWEEN SIGNS IN FEET		
	A	B	C
Urban and Rural 30 MPH and less	100	100	100
Urban and Rural 35 MPH to 50 MPH	350	350	350
Rural greater than 50 MPH	500	500	500
Expressway / Freeway	1000	1500	2640

NOTE:

1. Signs are shown for one direction of travel only. Place devices similar to those depicted for the opposite direction of travel.
2. A single signal installation is acceptable, on the right-hand side of the road, if it has two signal faces that are at least 8 feet apart and meets the other requirements of Part 4 of the MUTCD.
3. Install and operate temporary traffic control signals in accordance with the provisions of the MUTCD, Part 4. Signal timing shall be established by a qualified engineer. When the signal is changed to the flashing mode either manually or automatically, ensure red signal indications are flashed to both approaches.
4. Final location and spacing of signs and devices may be changed to fit field conditions as approved by the CO. If signals are moved, revised signal timing must be determined by a qualified engineer.
5. If the roadway surface is paved, install stop lines that comply with Section 3B.16 of the MUTCD. Remove existing conflicting pavement markings and raised markers between the work space and the stop line. Add no-passing lines in advance of the stop line that comply with Section 3B.02 of the MUTCD. Removeable pavement markings may be used for stop lines and no-passing pavement markings.
6. If closure is completely within the project limits, eliminate the "ROAD WORK AHEAD" (W20-1) and "END ROAD WORK" (G20-2) signs.
7. For project specific minimum width, refer to Special Contract Requirements, Section 156.
8. Do not allow equipment, materials, or vehicles to be parked or stored in the buffer space.

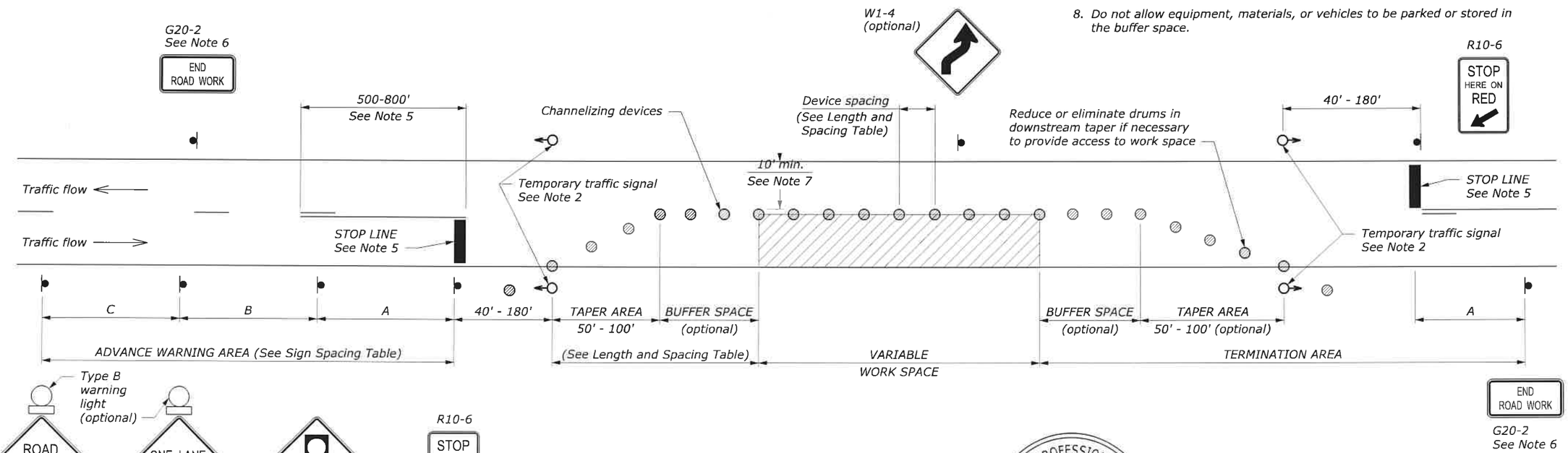

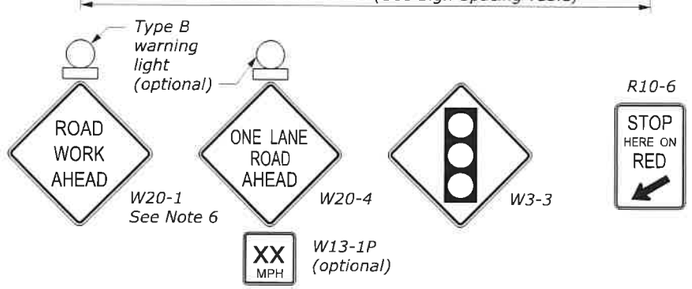

03/26/2021

FOR SELECTION ONLY

NO SCALE

U.S. DEPARTMENT OF TRANSPORTATION
FEDERAL HIGHWAY ADMINISTRATION
CENTRAL FEDERAL LANDS HIGHWAY DIVISION

U.S. CUSTOMARY DETAIL

TEMPORARY TRAFFIC CONTROL SINGLE LANE CLOSURE LAYOUT (WITH SIGNALS)

STANDARD APPROVED FOR USE 6/2005

REVISED: 9/2014 3/2016

DETAIL

ET 635-9

User: DENPWP03$
3:01:51 PM \\denpwp01\d$\pwicsworking\8459781\346613_6\V635-02_st635-09RM.dgn
3/25/2021

LENGTH AND SPACING TABLE

APPROACH SPEED* MPH	BUFFER SPACE LENGTH FEET	CHANNELIZING DEVICE SPACING IN FEET: TAPER AREA	BUFFER SPACE	WORK SPACE	CONCRETE BARRIER FLARE RATE	WORK ZONE CLEAR ZONE WIDTH FEET
20	115	20	40	40	1:8	10
25	155	20	50	50	1:8	10
30	200	20	60	60	1:8	10
35	250	20	70	70	1:9	10
40	305	20	80	80	1:10	15
45	360	20	90	90	1:12	20
50	425	20	100	100	1:14	20
55	495	20	110	110	1:16	20
60	570	20	120	120	1:16	30
65	645	20	130	130	1:16	30
70	730	20	140	140	1:16	30

* Approach speed based on the regulatory posted speed, not the advisory speed.

NOTE:

1. Install signs and other devices for single lane closure according to Details ET 635-6, 7, 8, or 9. Final location and spacing of signs and devices may be changed to fit field conditions as approved by the CO.
2. Place barrier according to the AASHTO Roadside Design Guide. Terminate barrier ends outside the work zone clear zone or protect the barrier ends with a crash cushion. Include reflectors on barrier at 25' intervals.
3. For project specific minimum width, refer to Special Contract Requirements, Section 156.
4. Place channelizing devices at downstream taper during non-work hours or when access is not needed.
5. Do not allow equipment, materials, or vehicles to be parked or stored in the buffer space.
6. Reduce or eliminate drums and barrier in downstream taper if necessary to provide access to work space.

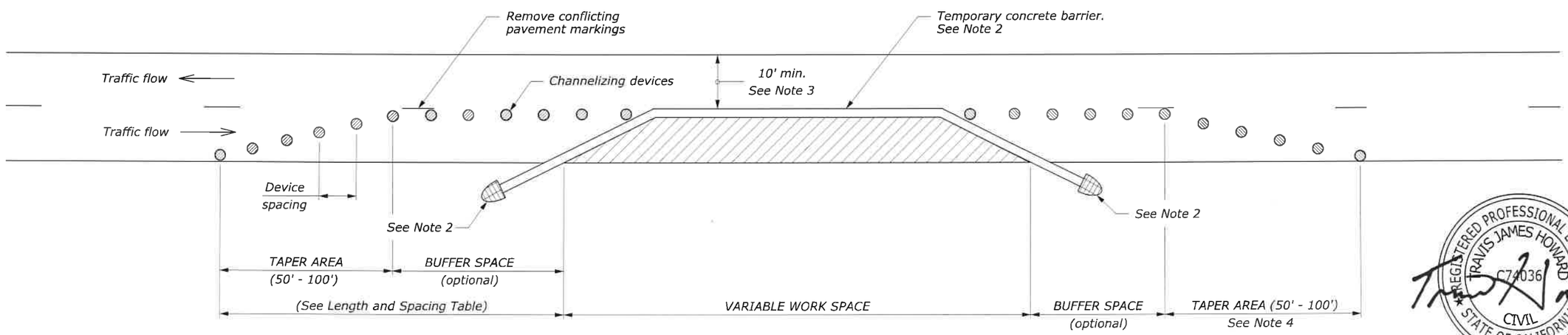

REGISTERED PROFESSIONAL ENGINEER TRAVIS JAMES HOWARD C74036 CIVIL STATE OF CALIFORNIA

03/26/2021

FOR SELECTION ONLY

NO SCALE

U.S. DEPARTMENT OF TRANSPORTATION
FEDERAL HIGHWAY ADMINISTRATION
CENTRAL FEDERAL LANDS HIGHWAY DIVISION

U.S. CUSTOMARY DETAIL

TEMPORARY TRAFFIC CONTROL SINGLE LANE CLOSURE LAYOUT (WITH TEMPORARY BARRIER)

DETAIL APPROVED FOR USE

REVISED: 6/2015 3/2016

DETAIL ET 635-13

User: DENPWP01$
3:02:35 PM \\denpwp01\d$\pwicsworking\845978\1346613_7\V635-03_st635-13RM.dgn
3/25/2021

STATE	PROJECT	SHEET NUMBER
CA	CA FLAP 03S11(1)	V39

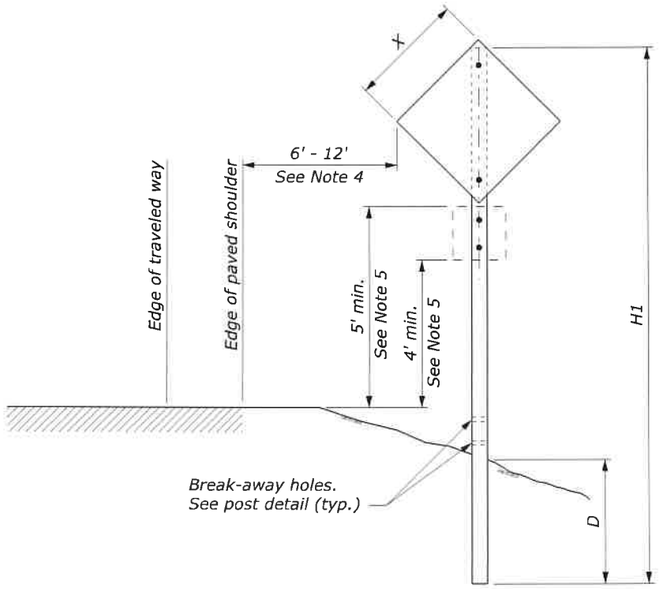

SINGLE POST SIGN

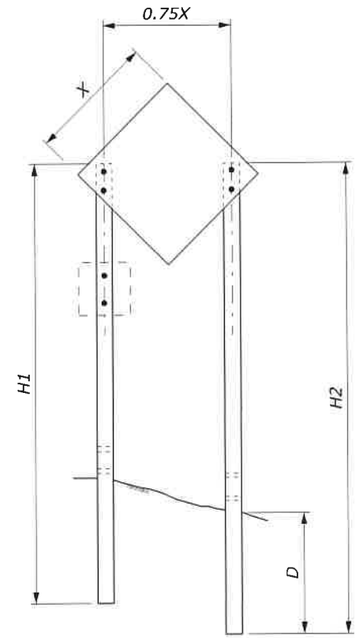

TWO POST SIGN

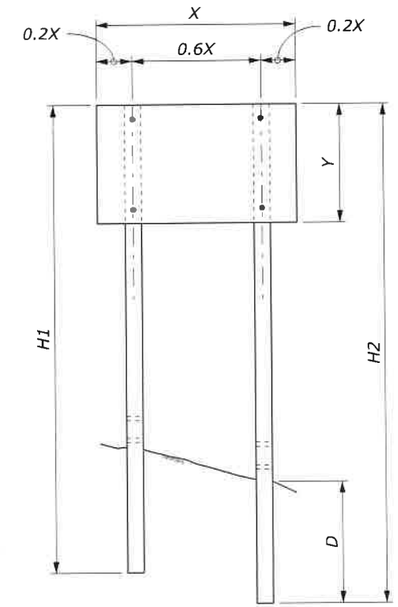

NOTE:

1. Attach sign panels with a minimum of 2 - ¼" dia. bolts per post.
2. H1 and H2 = Overall post length. Select post lengths to fit field conditions.
3. D = Post embedment depth for average soil conditions.
4. In areas where lateral distance is limited, a minimum lateral offset of 2' may be used. In areas with curbs, a minimum lateral distance of 1' behind the face of the curb may be used.
5. In pedestrian locations, or in areas with obstructed views, use 7' minimum mounting height for main sign and 6' minimum mounting height for secondary sign.
6. Use 7' minimum spacing between posts for sign posts 6" x 6" or larger.
7. State standards may be used as an alternative if approved by the CO.

REGISTERED PROFESSIONAL ENGINEER
TRAVIS JAMES HOWARD
C74036
CIVIL
STATE OF CALIFORNIA
03/26/2021
FOR SELECTION ONLY

WOOD POST SELECTION TABLE

WIDTH "X"	AREA (SQFT)	NUMBER OF POSTS	POST SIZE (INCH)	D (INCH)	HOLE SIZE (INCH)
Diamond ≤ 36" Other Shapes ≤ 48"	< 10	1	4 x 4	36	0
		1	4 x 6	48	1.5
Diamond ≤ 48"	10 - 20	1	6 x 6	48	2
Diamond ≤ 48" Other Shapes ≤ 12'	10 - 20	2	4 x 4	36	0
	20 - 50	2	4 x 6	48	1.5
> 13'	50 - 65	2	6 x 6	48	2
12' - 16'	50 - 65	3	4 x 6	48	1.5
> 17'	65 - 95	4	4 x 6	48	1.5
> 30'	65 - 95	3	6 x 6	48	2

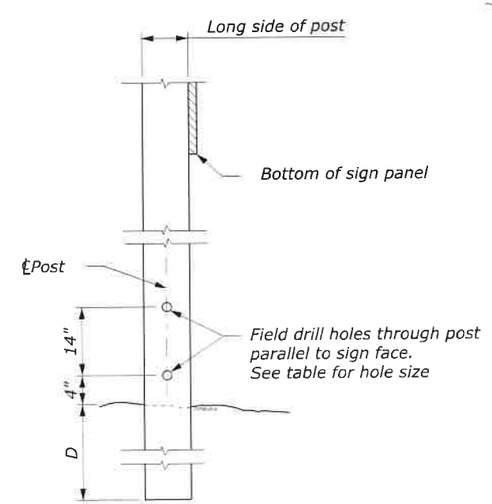

POST DETAIL

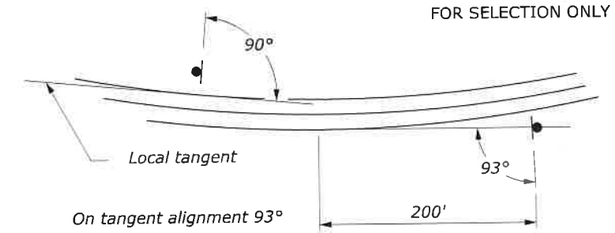

SIGN INSTALLATION ANGLE

NO SCALE

U.S. DEPARTMENT OF TRANSPORTATION
FEDERAL HIGHWAY ADMINISTRATION
CENTRAL FEDERAL LANDS HIGHWAY DIVISION

U.S. CUSTOMARY DETAIL

TEMPORARY TRAFFIC CONTROL SIGN INSTALLATION WOOD POSTS

STANDARD APPROVED FOR USE 6/2005

REVISED:
DRAFT: 10/2017

DETAIL 635-14

User: DENPWP01$
3:02:39 PM \\denpwp01\d$\pwicsworking\845978\1346613_9\V635-03_st635-14RM.dgn
3/25/2021