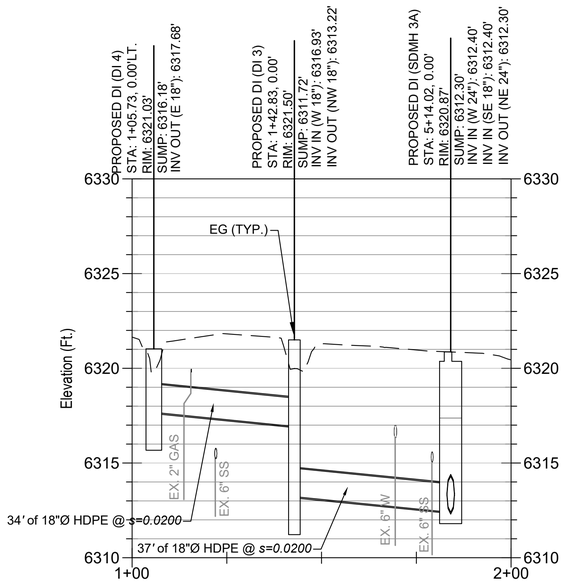

SD-L1 PROFILE

STA: 1+00.00 TO STA: 2+00.00

SEE SHEET C-2 FOR SD PLAN VIEW

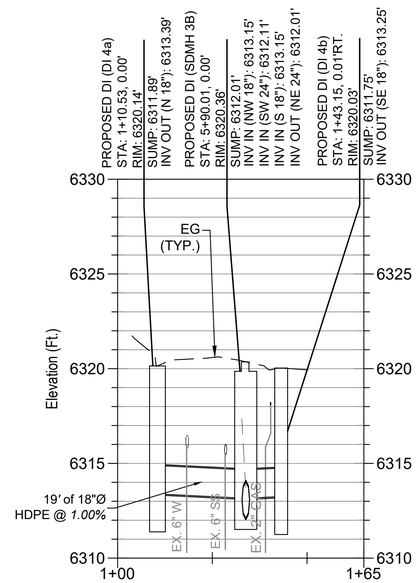

SD-L1A PROFILE

STA: 1+00.00 TO STA: 1+65.00

SEE SHEET C-2 FOR SD PLAN VIEW

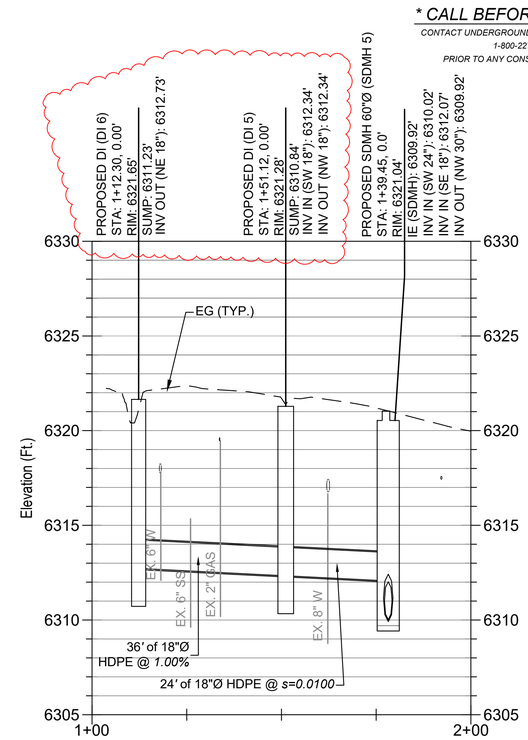

SD-L2 PROFILE

STA: 1+00.00 TO STA: 2+00.00

SEE SHEET C-2, C-3 FOR SD PLAN VIEW

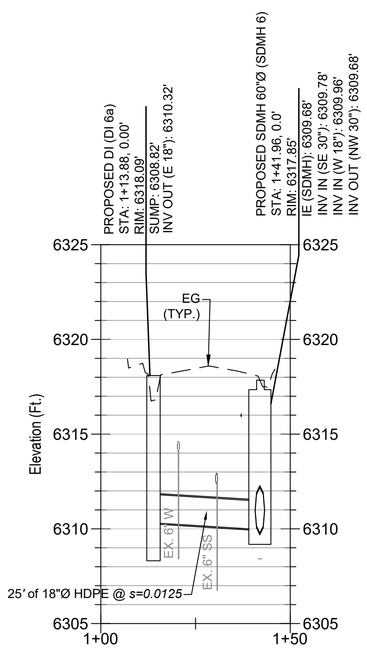

SD-L2A PROFILE

STA: 1+00.00 TO STA: 1+50.00

SEE SHEET C-3 FOR SD PLAN VIEW

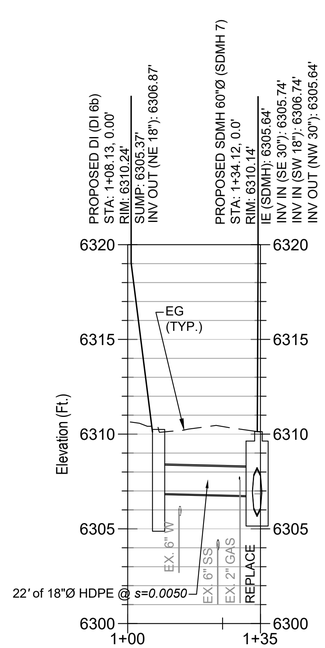

SD-L2B PROFILE

STA: 1+00.00 TO STA: 1+35.00

SEE SHEET C-3 FOR SD PLAN VIEW

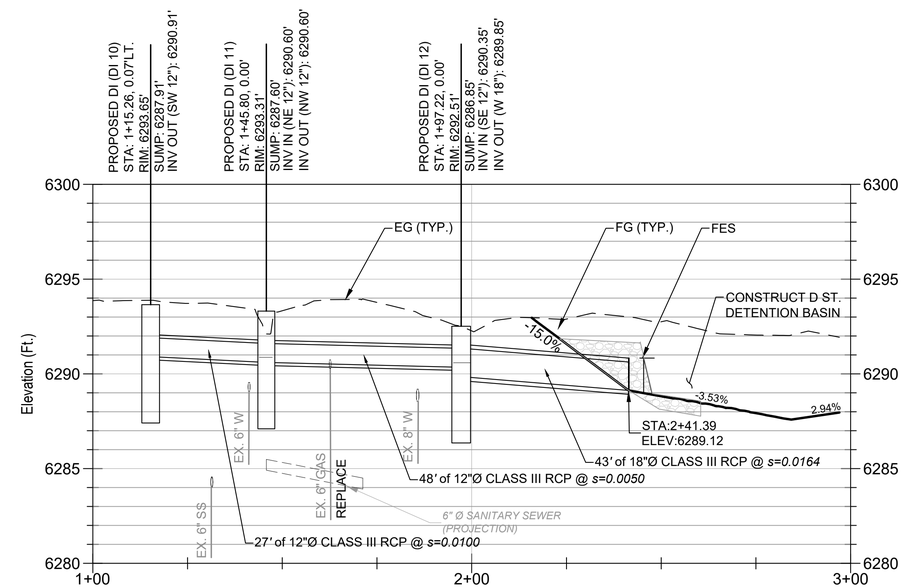

SD-L3 PROFILE

STA: 1+00.00 TO STA: 3+00.00

SEE SHEET C-6 FOR SD PLAN VIEW

0 20 40

HORIZONTAL SCALE: 1" = 20'

VERTICAL SCALE: 1" = 5'

CONSTRUCTION SET

* CALL BEFORE YOU DIG *

CONTACT UNDERGROUND SERVICE ALERT (USA)
1-800-227-2600
PRIOR TO ANY CONSTRUCTION WORK

Cardno
LAKE TAHOE
256 HIGHWAY 50, ZEPHYR COVE, NV 89448
TEL: (775) 588 - 9069 FAX: (775) 588 - 9219
www.cardno.com

STORM DRAIN LATERAL PROFILES SHEET 1

TVSG IMPROVEMENT PROJECT PHASE I

CITY OF SOUTH LAKE TAHOE

SOUTH LAKE TAHOE, CA

#	DATE	DESCRIPTION	BY
1	5/13/22	EX. UTILITY UPDATES, AND SD REVISIONS	IT
2	01/08/23	EX. UTILITY UPDATES, AND SD REVISIONS	IT

REGISTERED PROFESSIONAL ENGINEER
BRIAN E. NORRIS
No. C 59100
EXP. 06/30/23
CIVIL
STATE OF CALIFORNIA

1/8/23

DATE	FEB 2023
DRAWN	BT
DESIGNED	IT / JD
CHECKED	JD / BM
PROJECT #	E320400600
SHEET TITLE	C-11
SHEET NUMBER	18

Plot Stamp: 4/26/2023 3:30:25 PM - Trujillo, Ivan
File: U:\237800\40107_historical\15 CAD\Phase 1\1 DWG\3 Sheetset Sheets\TVGS_PLAN-PROFILE_BONANZA.dwg, Tab: C-11